NOTES
■ DESIGNED PER CALCS. #34712
■ ALL PARTS TO BE STENCILED: MFG DATE / PRODUCT ID / WEIGHT.

BILL OF MATERIALS

ITEM	UNIT QTY	QTY	PART NUMBER	DESCRIPTION
1	5.206 ft^3	5.206 ft^3	100005993	CONCRETE 5500 PSI DRYCAST
2	1	8	100002867	ANCHOR DOGBONE P52 2T X 3-3/8" GALV
3	1	8	100003015	TERMINATOR DUCT WITH SEAL 4.5IN T4501
4	1	2	100002766	Insert Ferrule Loop 0.625 x 3.5" Zinc (F42 or Equiv.)
5	1	1	300128563	REINFORCING MAT 300128563

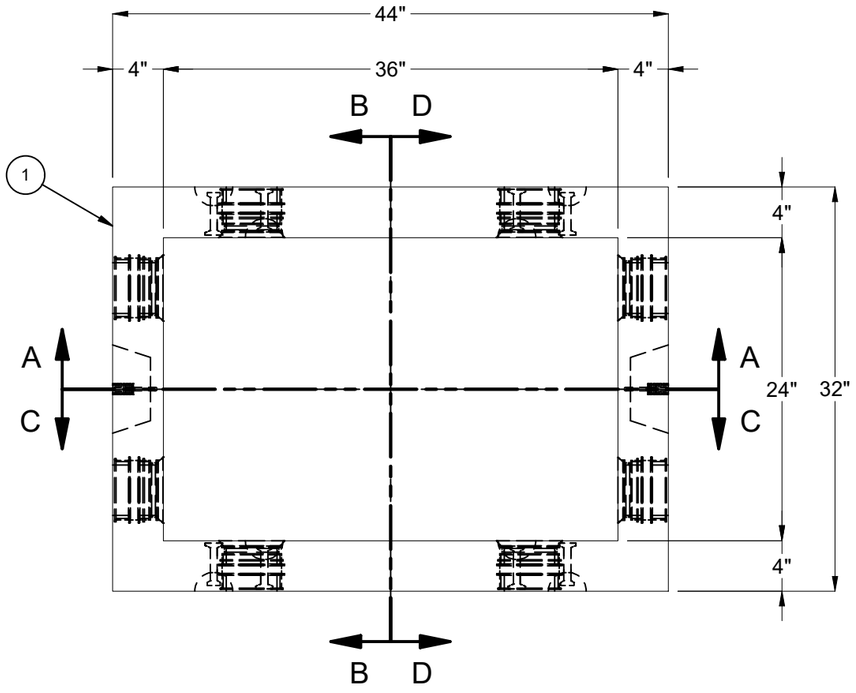

PLAN VIEW

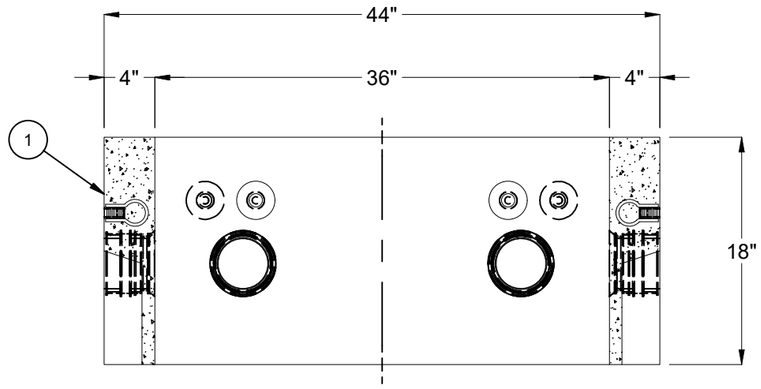

SECTION A-A

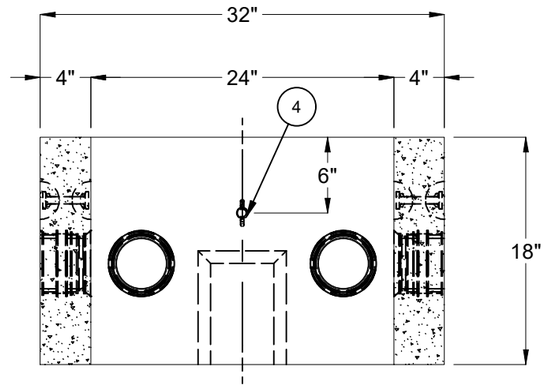

SECTION B-B

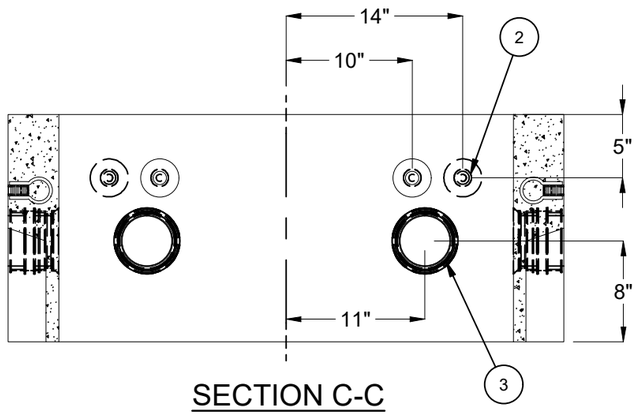

SECTION C-C

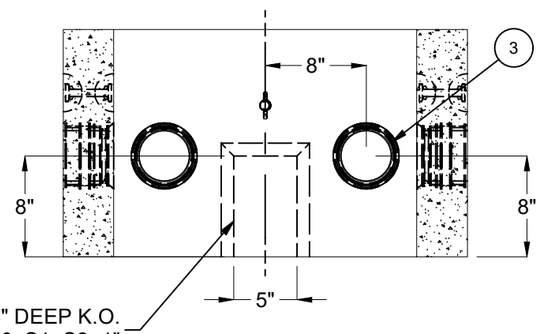

SECTION D-D

LIFTING NOTES
■ INSTALLATION: THIS CONCRETE PRODUCT IS DESIGNED TO BE LIFTED AT 5500 PSI WITH 4 LIFT CONNECTIONS EQUALLY LOADED TO 4 LIFTING POINTS AT A MINIMUM 60° SLING ANGLE, MEASURED FROM HORIZONTAL.
■ DEMOLDING: THIS CONCRETE PRODUCT IS DESIGNED TO BE LIFTED AT 2500 PSI WITH 4 LIFT CONNECTIONS EQUALLY LOADED TO 4 LIFTING POINTS AT A MINIMUM 90° SLING ANGLE, MEASURED FROM HORIZONTAL.
*All rigging shall be design by a qualified professional. Loading diagrams show illustrations of possible rigging setups to achieve the required sling angle and load leg equalization. Other valid rigging configurations are possible. A qualified professional must be consulted prior to lifting.

RIGGING DIAGRAMS*			
INSTALLATION	C	DEMOLDING	E
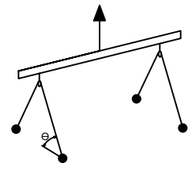		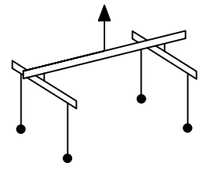	

BURY DEPTH:	1.0' - 1.0' to Top		
WATER LEVEL:	3.0'	APPROX. WEIGHT:	788.44 Lbs
DESIGN SPEC:	ACI 318,ASTM C857	LOADING SPEC:	A-16 (AASHTO HS20-44)
REINFORCEMENT TYPE:	Rebar	LIFTING TYPE:	Dogbone

Infrastructure
JENSEN
WWW.JENSENPRECAST.COM

©2025 Jensen Infrastructure - All rights reserved.
All materials appearing as Jensen Infrastructure documents and the like are proprietary work product and are protected under U.S. copyright and other laws.
Unless in conjunction with business conducted with Jensen Infrastructure , any use of Jensen Infrastructure work product without express, written consent is prohibited, and recipient is prohibited from distributing any and all work product to non-approved third parties under penalty of civil action. This product shall only be produced in a Jensen Infrastructure facility.

REVISION HISTORY			
REV	DESCRIPTION	DATE	APPROVED
B-2	UPDATE TITLE BLOCK	4/4/2025	

DESCRIPTION:	Riser 2436x18 Terminators SDGE 3313 CASTING LAYOUT		REV: B-2
PART NUMBER:	200056407	DRAWN BY:	D. Mejia
CREATED:	9/15/2021	MODIFIED:	4/4/2025
			SHEET: 1 OF 1

200056407.idw