NOTES
■ IN COMPLIANCE WITH UNIFORM PLUMBING CODE (UPC), INTERNATIONAL PLUMBING CODE (IPC), AND STRUCTURAL LOADING REQUIREMENTS OF ASTM INTERNATIONAL C1227.
■ MINIMUM ONE (1) ACCESS OPENING PER COMPARTMENT REQUIRED (AS SHOWN).
■ MUST BE INSTALLED PER "JENSEN PRECAST UNDERGROUND WASTEWATER PRECAST CONCRETE TANK INSTALLATION PROCEDURE" WHICH CAN BE FOUND AT https://www.jensenprecast.com/Tank-Installation-Procedure-d2106.pdf. THIS PROCEDURE ADDRESSES REQUIRED EXCAVATION, SITE PREPARATION, INSTALLATION, VENTILATION, AND WATER/VACCUM TESTING

BILL OF MATERIALS

ITEM	QTY	PART NUMBER	DESCRIPTION
1	1	200055596	Tank JS 1500 Gallon 4 Inch Assembly 24"E, 30"E Single Baffle
2	1	200055597	Plumbing for 200055598
3	JOB SPECIFIC	100014972	TANK RISER D24X18 RIBBED ORENCO RR2418
4	JOB SPECIFIC	100008452	TANK RISER D30X18 RIBBED ORENCO RR3018
5	JOB SPECIFIC	100023415	LID 24DIA GASKET OSI FLD24G FIBERGLASS DURAFIBER
6	JOB SPECIFIC	100006149	LID 30DIA GASKET OSI FLD30G FIBERGLASS DURAFIBER
7	JOB SPECIFIC	100012046	Plug Cover D2428x6 Slab Top

200055598.idw

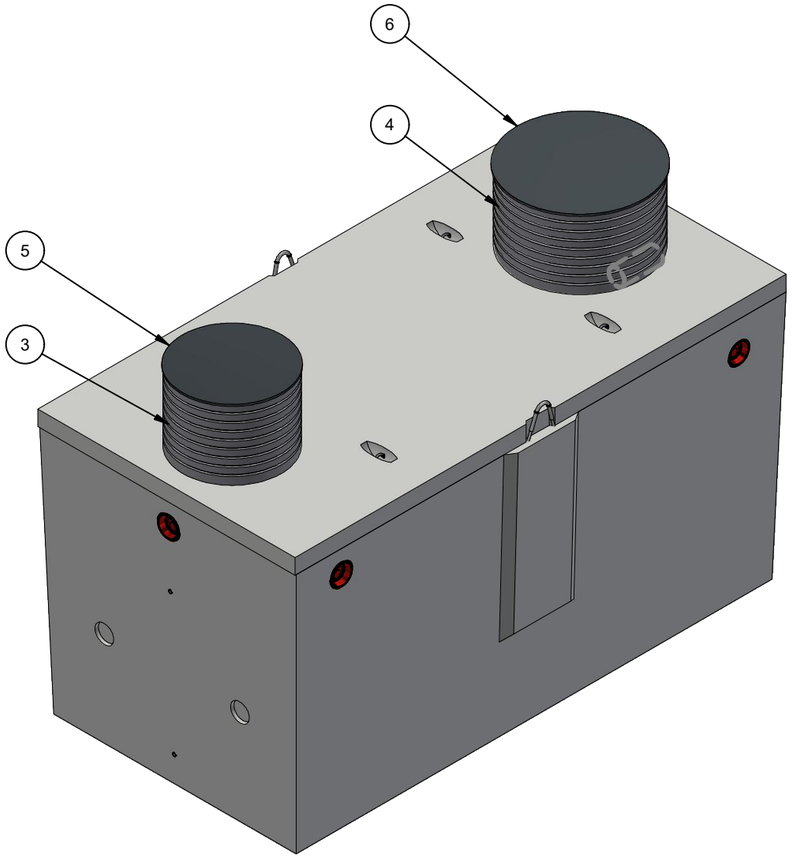

ISO LAYOUT

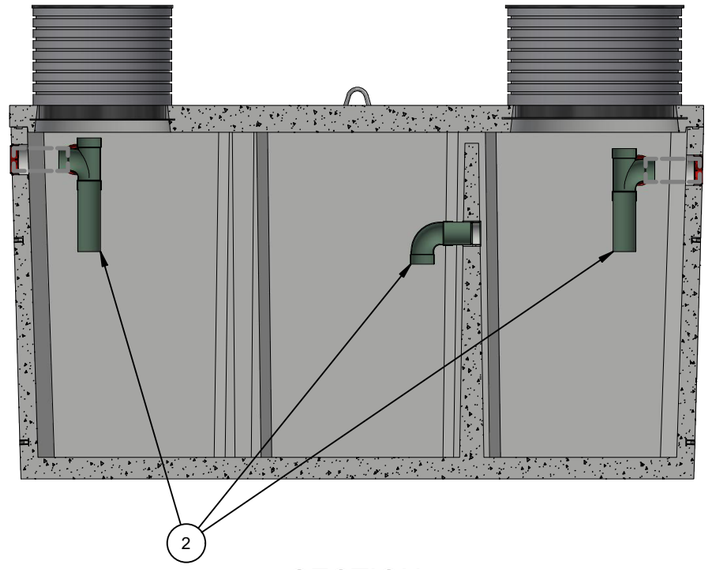

SECTION

CHANGE HISTORY			
NO.	DESCRIPTION	DATE	BY
1	DRAWING CREATED	8/20/2021	MRV

BURY DEPTH:	0.0' - 3.0' to Top		
WATER LEVEL:	Below Structure	APPROX. WEIGHT:	14129.27 Lbs
DESIGN SPEC:	ASTM C890,ACI 318	LOADING SPEC:	A-02 (200 psf)
AGENCY:		AGENCY SPEC:	

JENSEN PRECAST EST. 1968

WWW.JENSENPRECAST.COM

©2021 Jensen Precast- All rights reserved.
All materials appearing as Jensen Precast documents and the like are proprietary work product and are protected under U.S. copyright and other laws.
Unless in conjunction with business conducted with Jensen Precast, any use of Jensen Precast work product without express, written consent is prohibited, and recipient is prohibited from distributing any and all work product to non-approved third parties under penalty of civil action.

DESCRIPTION: Tank JS 1500 Gallon 4 Inch Assembly Septic 24"E, 30"E Single Baffle LAYOUT REVIEW			REV: A-1
PART NUMBER:	200055598	DRAWN BY:	M.Vallarino
CREATED:	8/20/2021	MODIFIED:	8/20/2021
			SHEET: 1 OF 2

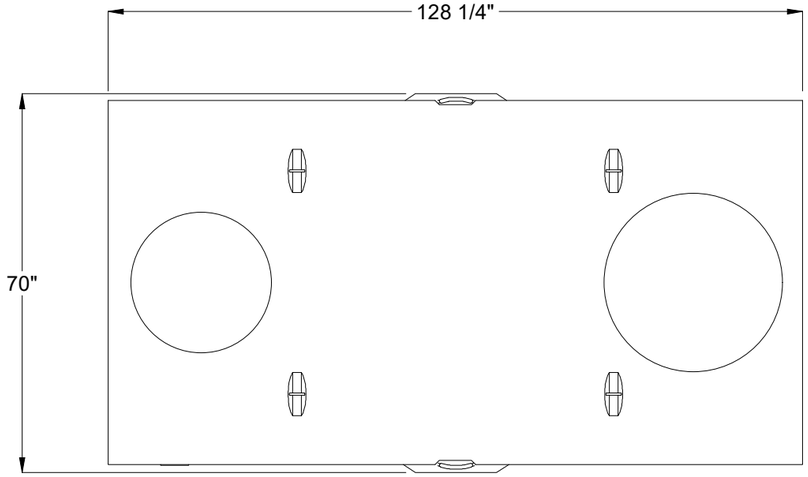

PLAN VIEW

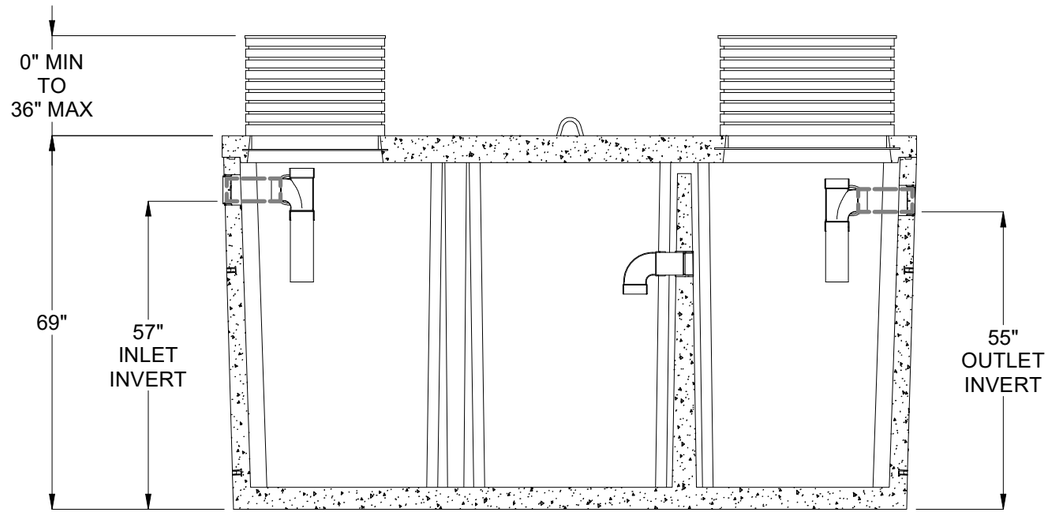

SECTION

BURY DEPTH:	0.0' - 3.0' to Top		
WATER LEVEL:	Below Structure	APPROX. WEIGHT:	14129.27 Lbs
DESIGN SPEC:	ASTM C890,ACI 318	LOADING SPEC:	A-02 (200 psf)
AGENCY:		AGENCY SPEC:	

JENSEN PRECAST EST. 1968

WWW.JENSENPRECAST.COM

©2021 Jensen Precast- All rights reserved.
All materials appearing as Jensen Precast documents and the like are proprietary work product and are protected under U.S. copyright and other laws.
Unless in conjunction with business conducted with Jensen Precast, any use of Jensen Precast work product without express, written consent is prohibited, and recipient is prohibited from distributing any and all work product to non-approved third parties under penalty of civil action.

DESCRIPTION:	Tank JS 1500 Gallon 4 Inch Assembly Septic 24"E, 30"E Single Baffle LAYOUT DRAWING		
PART NUMBER:	200055598	DRAWN BY:	M.Vallarino
CREATED:	8/20/2021	MODIFIED:	8/20/2021

REV: A-1

SHEET: 2 OF 2

200055598.idw