DESIGN NOTES
■ DESIGNED IN ACCORDANCE WITH AASHTO HS20-44 TRAFFIC BRIDGE LOADING USING 6,000 PSI COMPRESSIVE STRENGTH CONCRETE AND 60,000 PSI YIELD STRENGTH ASTM A-706 STEEL REINFORCEMENT PER CALCS. #34674
■ MINIMUM EXCAVATION SIZE: 8'-8" X 9'-3" DEPTH REQ'D.
■ FOR COMPLETE DESIGN AND PRODUCT INFORMATION CONTACT JENSEN PRECAST.
■ ALL PARTS TO BE STENCILED: MFG DATE / JOB NUMBER / PRODUCT ID / WEIGHT.

TABLE

JENSEN PART No.	SHORT DESCRIPTION	SDGE STOCK No.
100008940	3427 Distribution Transformer Pad 92" x 98"	S514012

BILL OF MATERIALS

ITEM	UNIT QTY	QTY	PART NUMBER	DESCRIPTION	MASS (lb)
1	1	1	100008940	Pad 9790x6 SDGE 3427	4144

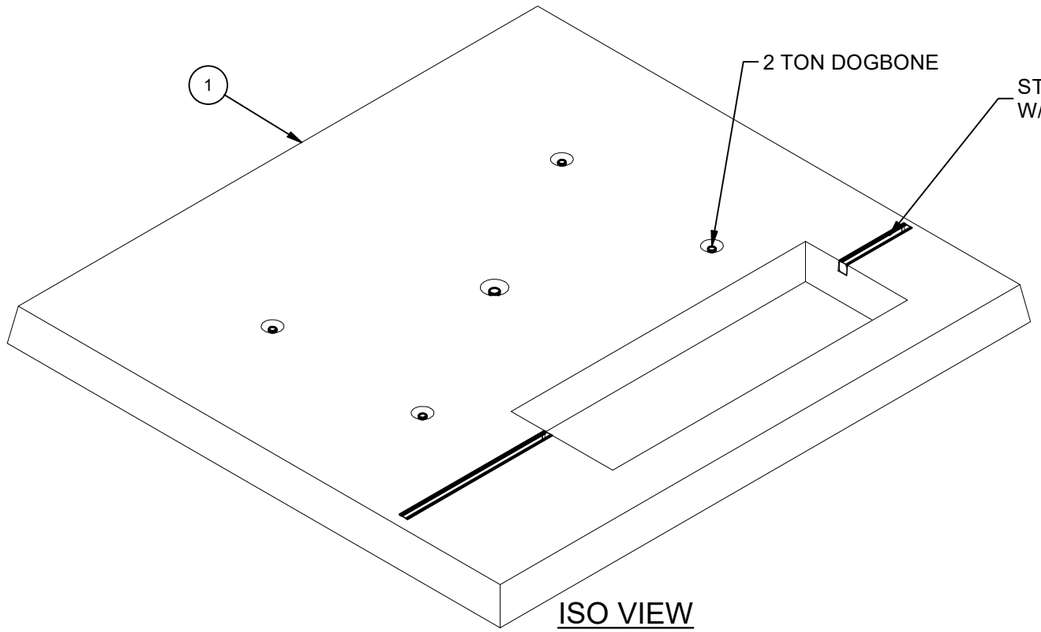

ISO VIEW

200055226.idw

LIFTING NOTES
■ FIELD INSTALLATION: PLANT DEMOLDING: MINIMUM HANDLING CONCRETE STRENGTH F'c = 5500 PSI RIGGING EQUALIZER REQUIRED TO EQUALIZE LOAD TO 4 LIFTING POINTS WITH A SLING ANGLE BETWEEN 60° AND 90°

REVISION HISTORY			
REV	DESCRIPTION	DATE	APPROVED
B-1	UPDATE TITLE BLOCK	11/26/2025	

BURY DEPTH:	0.0' - 0.3' to Top		
WATER LEVEL:	Below Structure	APPROX. WEIGHT:	4144.21 Lbs
DESIGN SPEC:	ASTM C857,ACI 318	LOADING SPEC:	A-03 (300 psf)
AGENCY:	SDGE	AGENCY SPEC:	3427

Infrastructure
JENSEN
WWW.JENSENPRECAST.COM

©2025 Jensen Infrastructure - All rights reserved.
All materials appearing as Jensen Infrastructure documents and the like are proprietary work product and are protected under U.S. copyright and other laws.
Unless in conjunction with business conducted with Jensen Infrastructure any use of Jensen Infrastructure work product without express, written consent is prohibited, and recipient is prohibited from distributing any and all work product to non-approved third parties under penalty of civil action. This product shall only be produced in a Jensen Infrastructure facility.

DESCRIPTION:	PAD 9790 x 6 SDGE 3427 LAYOUT REVIEW		REV: B-1
PART NUMBER:	200055226	DRAWN BY:	D. Mejia
CREATED:	8/2/2021	MODIFIED:	11/26/2025
			SHEET: 1 OF 2

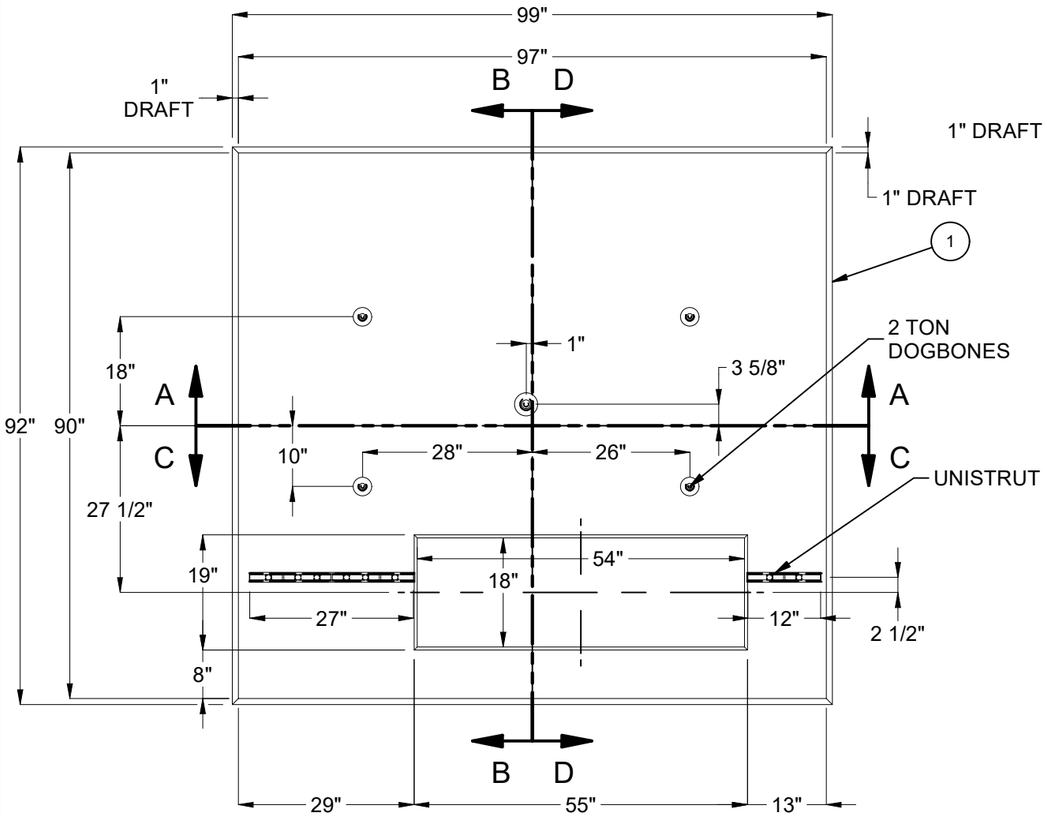

PLAN VIEW

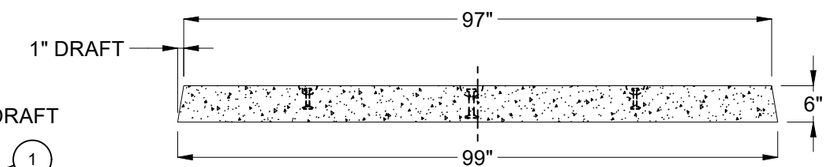

SECTION A-A

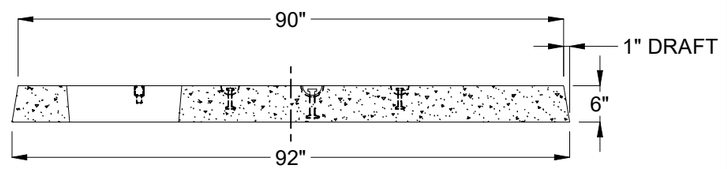

SECTION B-B

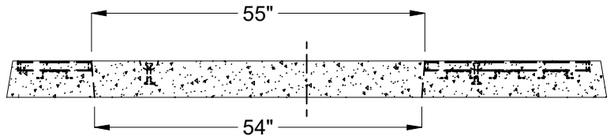

SECTION C-C

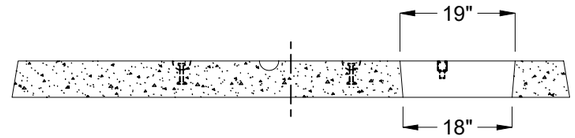

SECTION D-D

200055226.idw

BURY DEPTH:	0.0' - 0.3' to Top		
WATER LEVEL:	Below Structure	APPROX. WEIGHT:	4144.21 Lbs
DESIGN SPEC:	ASTM C857,ACI 318	LOADING SPEC:	A-03 (300 psf)
AGENCY:	SDGE	AGENCY SPEC:	3427

Infrastructure
JENSEN
WWW.JENSENPRECAST.COM

©2025 Jensen Infrastructure - All rights reserved.
All materials appearing as Jensen Infrastructure documents and the like are proprietary work product and are protected under U.S. copyright and other laws.
Unless in conjunction with business conducted with Jensen Infrastructure any use of Jensen Infrastructure work product without express, written consent is prohibited, and recipient is prohibited from distributing any and all work product to non-approved third parties under penalty of civil action. This product shall only be produced in a Jensen Infrastructure facility.

DESCRIPTION:	PAD 9790 x 6 SDGE 3427 LAYOUT DRAWING		REV: B-1
PART NUMBER:	200055226	DRAWN BY:	D. Mejia
CREATED:	8/2/2021	MODIFIED:	11/26/2025
			SHEET: 2 OF 2