DESIGN NOTES
■ MINIMUM EXCAVATION SIZE: 9'-2" X 6'-1" DEPTH REQ'D.
■ FOR COMPLETE DESIGN AND PRODUCT INFORMATION CONTACT JENSEN PRECAST.

BILL OF MATERIALS

ITEM	QTY	PART NUMBER	DESCRIPTION
1	1	200016202	Tank JP 1000 Gallon 4 Inch Rect. Bottom Section Single Baffle
2	1	200013294	Tank JP 1000 Gallon x 9 Slab Top 24"E, 24"C, 24"E
3	2.000 ul	100013648	SEALANT JOINT BUTYL RUBBER ASTM C-990 AND M198 CS-102 1IN EQUIV X14.5FT PER ROLL

200053629.idw

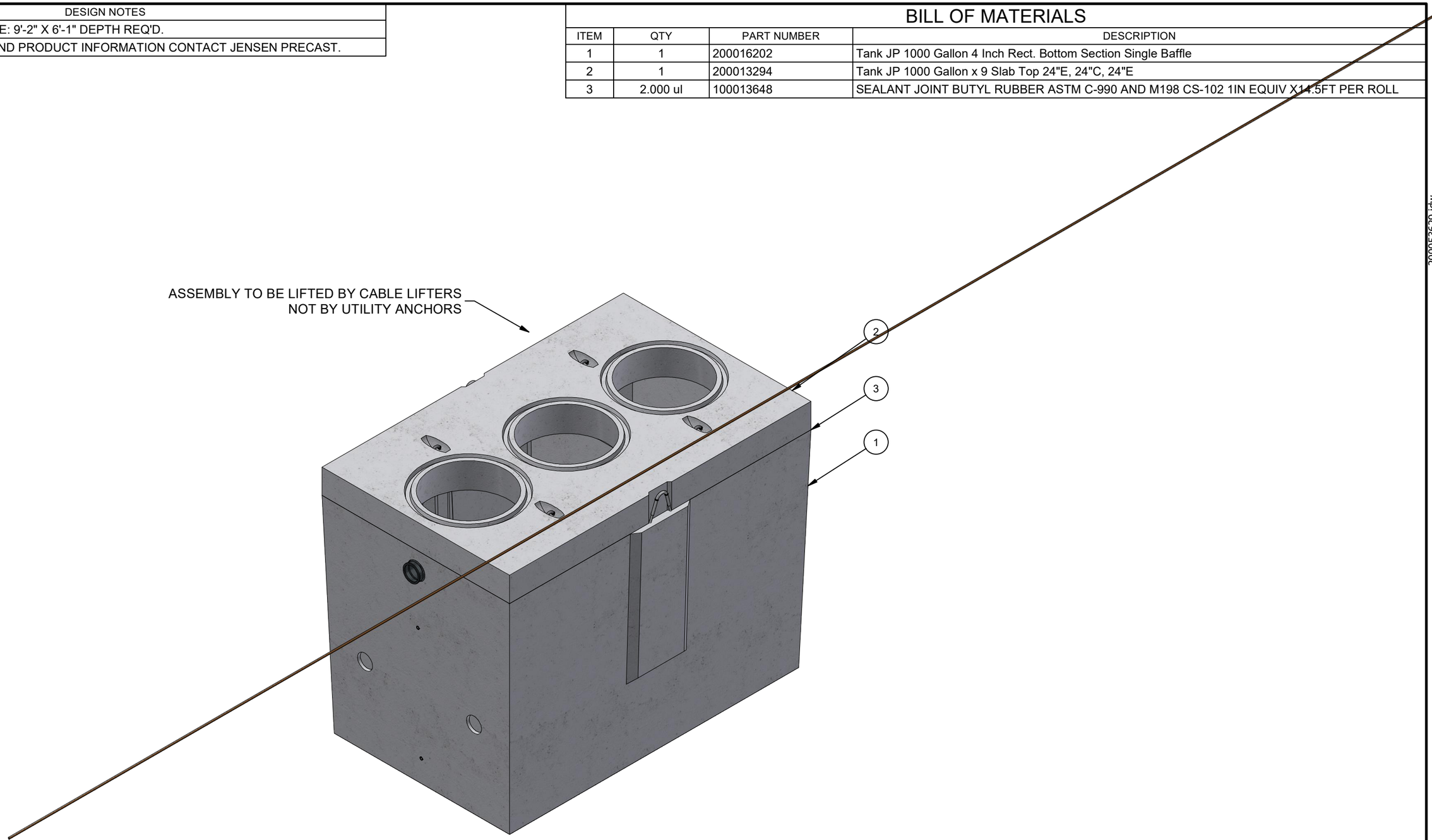

ISO LAYOUT

LIFTING NOTES
■ FIELD INSTALLATION: PLANT DEMOLDING: MINIMUM HANDLING CONCRETE STRENGTH F'c = 2500 PSI RIGGING EQUALIZER REQUIRED TO EQUALIZE LOAD TO 2 LIFTING POINTS WITH A SLING ANGLE OF 90°

CHANGE HISTORY			
NO.	DESCRIPTION	DATE	BY
1	DRAWING CREATED	6/16/2021	MRV

BURY DEPTH:	1.1' - 6.0' to Top		
WATER LEVEL:	Below Structure	APPROX. WEIGHT:	12552.32 Lbs
DESIGN SPEC:		LOADING SPEC:	
AGENCY:		AGENCY SPEC:	

JENSEN PRECAST EST. 1968

WWW.JENSENPRECAST.COM

©2022 Jensen Precast- All rights reserved.
All materials appearing as Jensen Precast documents and the like are proprietary work product and are protected under U.S. copyright and other laws.
Unless in conjunction with business conducted with Jensen Precast, any use of Jensen Precast work product without express, written consent is prohibited, and recipient is prohibited from distributing any and all work product to non-approved third parties under penalty of civil action.

DESCRIPTION: Tank JP 1000 Gallon 4 Inch Assembly 24"E, 24"C, 24"E Single Baffle LAYOUT REVIEW			REV: A-1
PART NUMBER:	200053629	DRAWN BY: T.Larson	SHEET: 1 OF 1
CREATED:	6/16/2021	MODIFIED: 2/24/2022	