NOTES
■ FOR COMPLETE DESIGN AND PRODUCT INFORMATION CONTACT JENSEN PRECAST.

BILL OF MATERIALS

ITEM	UNIT QTY	QTY	PART NUMBER	DESCRIPTION
1	17.818 ft^3	17.818 ft^3	100011429	CONCRETE MIX GENERIC 7000 PSI
2	1	4	100002874	ANCHOR DOGBONE P52 4T X 4-3/4" GALV
3	1	1	100013910	COVER 3636 8197/A1PT ASTM A536 DI AIRCRAFT ELECTRIC HATCH EJ 00819724b01
4	1	1	300127605	REINFORCING MAT 300127605

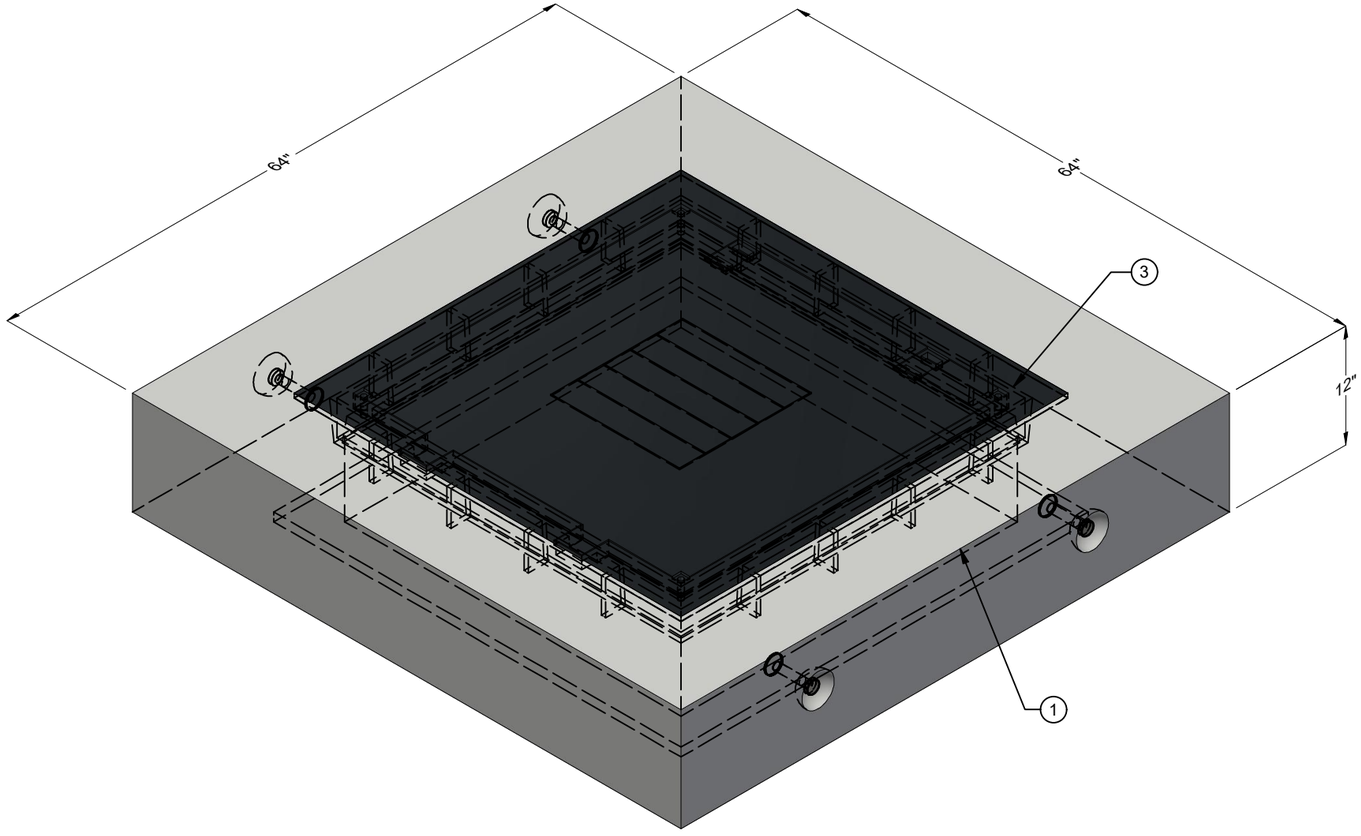

ISO REF

LIFTING NOTES
■ THIS CONCRETE PRODUCT IS DESIGNED TO BE LIFTED AT 3000 PSI WITH 4 LIFT CONNECTIONS EQUALLY LOADED TO 2 LIFTING POINTS AT A MINIMUM 90° SLING ANGLE, MEASURED FROM HORIZONTAL.

BURY DEPTH:	0.0' - 0.0' to Top		
WATER LEVEL:	Below Structure	WEIGHT:	3356.93 Lbs
DESIGN SPEC:	AASHTO LRFD	LOADING SPEC:	Aircraft
REINFORCEMENT TYPE:	Rebar	LIFTING TYPE:	Dogbone

JENSEN PRECAST EST. 1968

WWW.JENSENPRECAST.COM

©2019 Jensen Precast- All rights reserved.
All materials appearing as Jensen Precast documents and the like are proprietary work product and are protected under U.S. copyright and other laws.
Unless in conjunction with business conducted with Jensen Precast, any use of Jensen Precast work product without express, written consent is prohibited, and recipient is prohibited from distributing any and all work product to non-approved third parties under penalty of civil action.

REVISION HISTORY			
REV	DESCRIPTION	DATE	BY
A	2002-19273-NCA	02/11/2020	ACHO

DESCRIPTION: Vault 4848 x 13 Slab Top 36"x36"C Cast-In Cover CASTING LAYOUT			REV: A-1
PART NUMBER:	200051951	DRAWN BY: A.CHO	SHEET: 1 OF 2
CREATED:	8/14/2019	MODIFIED: 5/26/2021	

200051951.idw

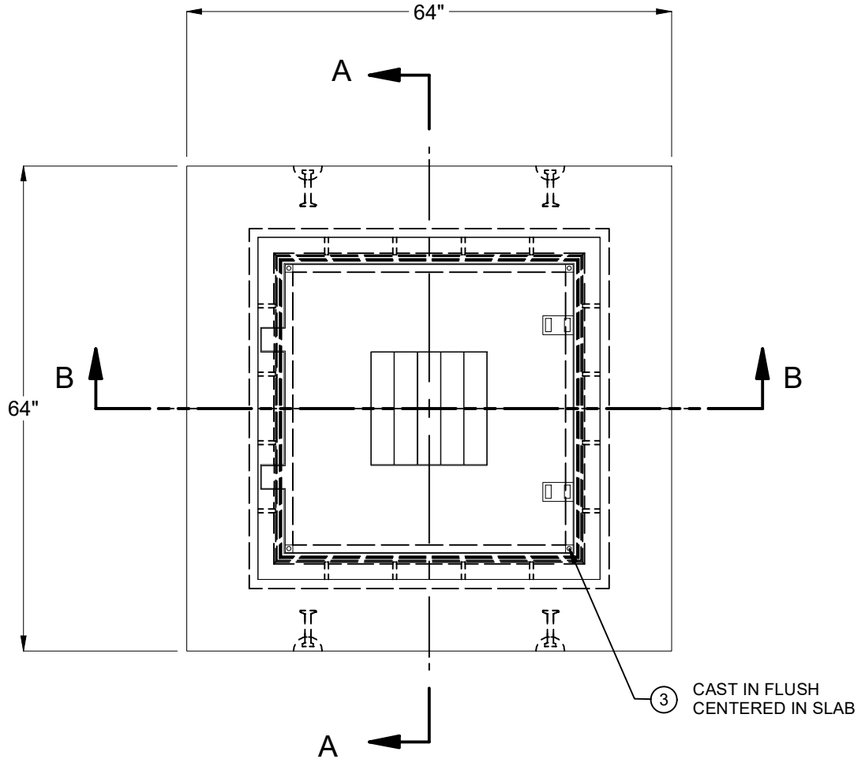

PLAN VIEW

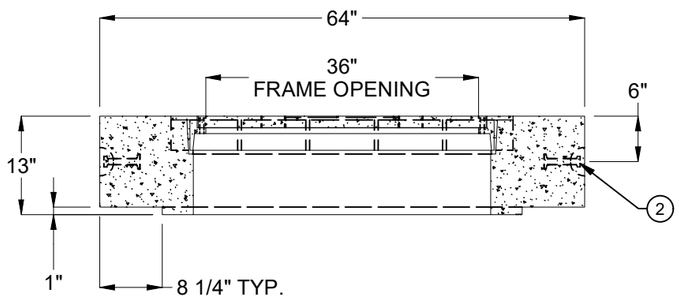

SECTION A-A

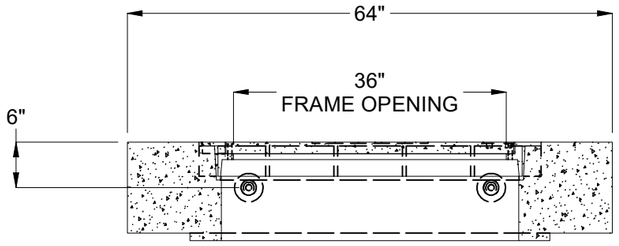

SECTION B-B

BURY DEPTH:	0.0' - 0.0' to Top		
WATER LEVEL:	Below Structure	WEIGHT:	3356.93 Lbs
DESIGN SPEC:	AASHTO LRFD	LOADING SPEC:	Aircraft
REINFORCEMENT TYPE:	Rebar	LIFTING TYPE:	Dogbone

JENSEN PRECAST EST. 1968

WWW.JENSENPRECAST.COM

©2019 Jensen Precast- All rights reserved.
All materials appearing as Jensen Precast documents and the like are proprietary work product and are protected under U.S. copyright and other laws.
Unless in conjunction with business conducted with Jensen Precast, any use of Jensen Precast work product without express, written consent is prohibited, and recipient is prohibited from distributing any and all work product to non-approved third parties under penalty of civil action.

DESCRIPTION:	Vault 4848 x 13 Slab Top 36"x36"C Cast-In Cover CASTING DRAWING		REV: A-1
PART NUMBER:	200051951	DRAWN BY:	A.CHO
CREATED:	8/14/2019	MODIFIED:	5/26/2021

SHEET: 2 OF 2

200051951.idw