BILL OF MATERIALS

ITEM	QTY	PART NUMBER	DESCRIPTION
1	3	100002697	PIPE FITTING PVC SDR35 SAN TEE 4DIA
2	157.750 in	100002510	PIPE PVC 4IN DIA SDR35 ASTM D-3034 SOLVENT WELD SEWER DRAIN

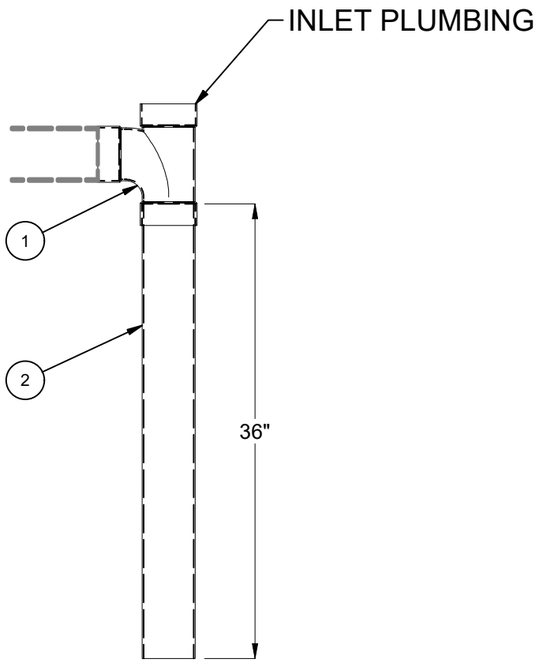

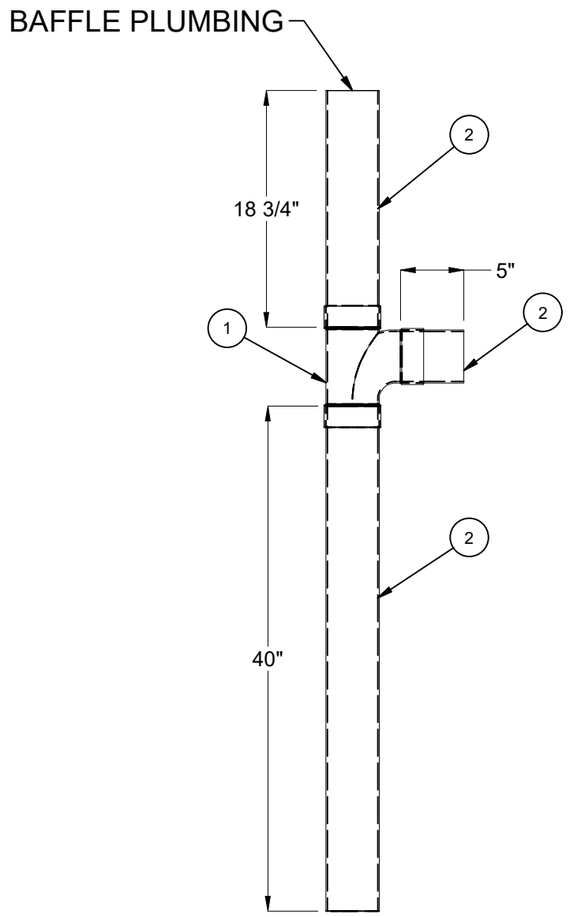

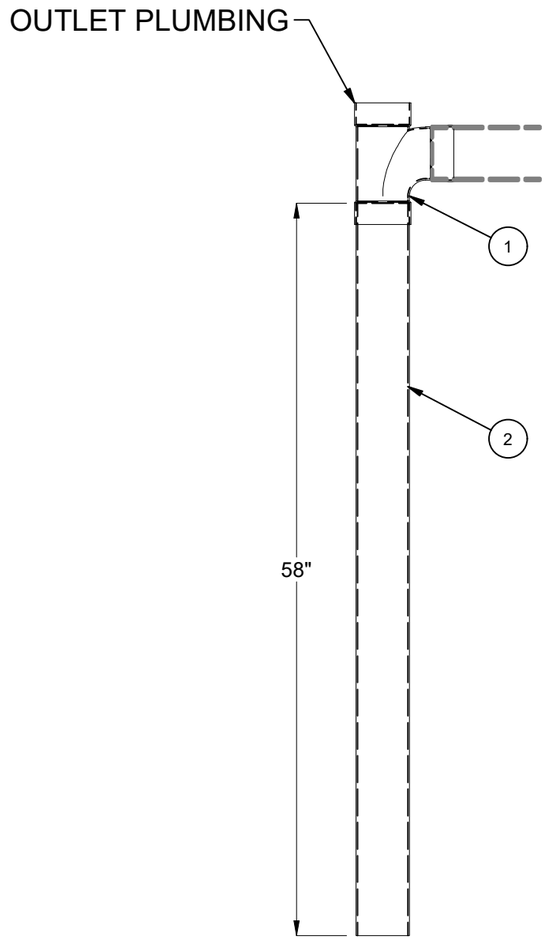

ELEVATION VIEW

200051664.idw

BURY DEPTH:	to			DESCRIPTION: 200051663 Plumbing - JZ 5000 4 Inch Gravity Grease Interceptor 24"E, 24"B, 24"E Single Baffle BioConcrete PLUMBING LAYOUT	REV: B-1
WATER LEVEL:	APPROX. WEIGHT:	13.73 Lbs		PART NUMBER: 200051664 / DRAWN BY: E. Fine	SHEET: 1 OF 1
DESIGN SPEC:	LOADING SPEC:			CREATED: 2/12/2021 / MODIFIED: 8/4/2022	
AGENCY:	AGENCY SPEC:				

JENSEN PRECAST EST. 1968

WWW.JENSENPRECAST.COM

©2022 Jensen Precast- All rights reserved.
All materials appearing as Jensen Precast documents and the like are proprietary work product and are protected under U.S. copyright and other laws.
Unless in conjunction with business conducted with Jensen Precast, any use of Jensen Precast work product without express, written consent is prohibited, and recipient is prohibited from distributing any and all work product to non-approved third parties under penalty of civil action.