DESIGN NOTES
■ MINIMUM EXCAVATION SIZE: 17'-7" X 8'-8" DEPTH REQ'D.
■ FOR COMPLETE DESIGN AND PRODUCT INFORMATION CONTACT JENSEN PRECAST.

BILL OF MATERIALS

ITEM	QTY	PART NUMBER	DESCRIPTION
1	170.315 ft^3	100031792	CONCRETE 5000 PSI WETCAST BIO-CONCRETE
2	1	100002705	FITTING PVC SDR35 6IN DIA COUPLING ASTM D-3034 SOLVENT WELD SEWER DRAIN
3	2	100007338	CONNECTOR BOOT 3005-CE TYPE VI CAST-IN-SEAL ASTM C923/C1644 CLOSED HOLE-4-6 4.52-6.64
4	4	100026190	ANCHOR CABLE LOOP LIFT SEPTIC 1/2 X 51 500-5100
5	30	100003348	INS THRD FRL THNSLB STRUT FX-16 5/8IN ZINC
6	1	300113120	REINFORCING MAT 300113120

200051662.idw

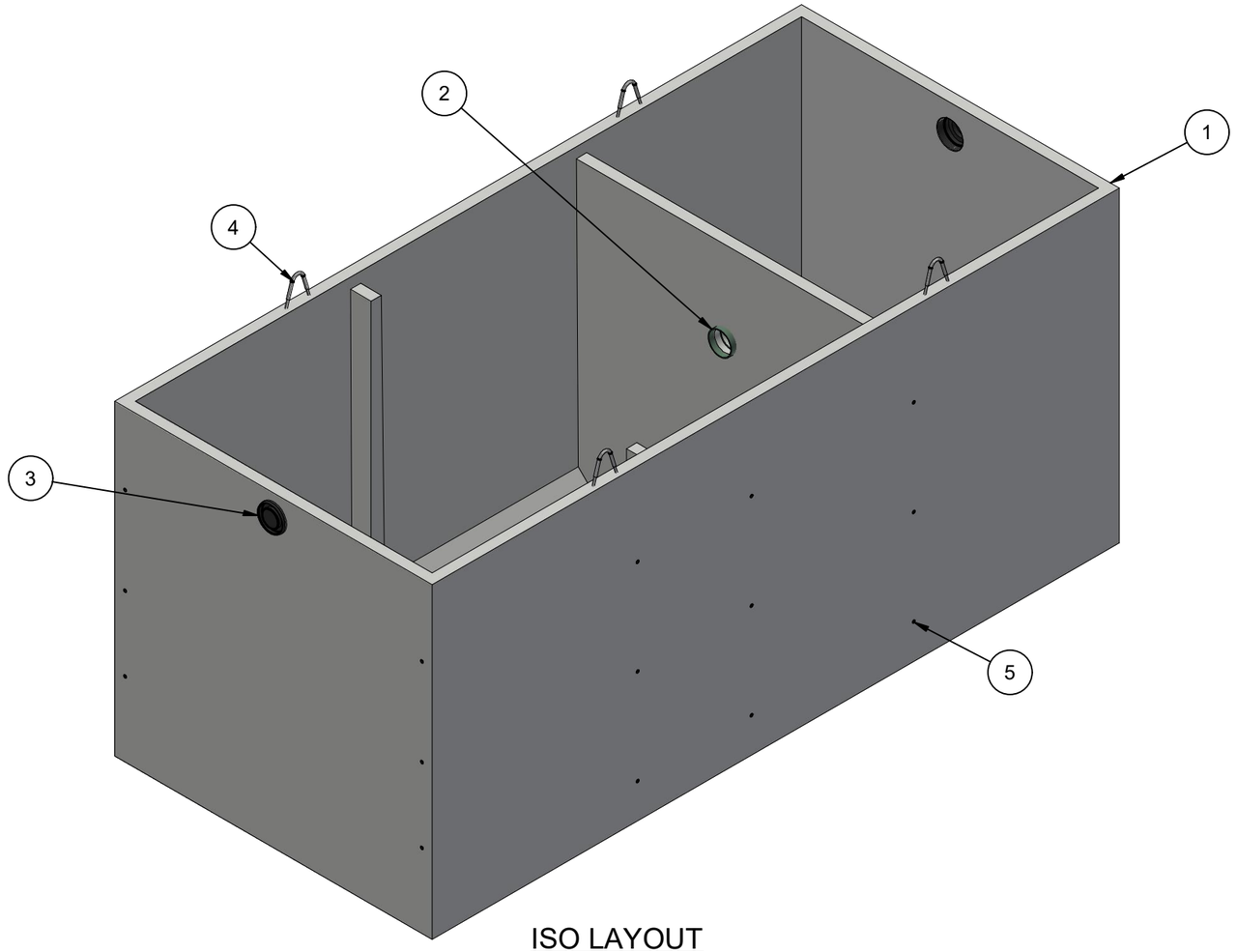

ISO LAYOUT

LIFTING NOTES
■ FIELD INSTALLATION: PLANT DEMOLDING: MINIMUM HANDLING CONCRETE STRENGTH F'c = 2500 PSI RIGGING EQUALIZER REQUIRED TO EQUALIZE LOAD TO 4 LIFTING POINTS WITH A SLING ANGLE OF 90°

REVISION HISTORY			
REV	DESCRIPTION	DATE	BY
A-1	DRAWING CREATED	4/26/2021	BGD

BURY DEPTH:	6.9' - 11.7' to Top		
WATER LEVEL:	Below Structure	WEIGHT:	25634.38 Lbs
DESIGN SPEC:	ASTM C890,ACI 318	LOADING SPEC:	A-16 (AASHTO HS20-44)
REINFORCEMENT TYPE:	Rebar	LIFTING TYPE:	Cable

JENSEN PRECAST EST. 1968

WWW.JENSENPRECAST.COM

©2018 Jensen Precast- All rights reserved.
All materials appearing as Jensen Precast documents and the like are proprietary work product and are protected under U.S. copyright and other laws.
Unless in conjunction with business conducted with Jensen Precast, any use of Jensen Precast work product without express, written consent is prohibited, and recipient is prohibited from distributing any and all work product to non-approved third parties under penalty of civil action.

DESCRIPTION:	Tank JZ 5000 Gallon 6 Inch Rect. Bottom Section Single Baffle Admixture – BioConcrete CASTING LAYOUT		REV: A-1
PART NUMBER:	200051662	DRAWN BY:	B. Gentry-Dunn
CREATED:	3/20/2018	MODIFIED:	5/20/2021
			SHEET: 1 OF 3

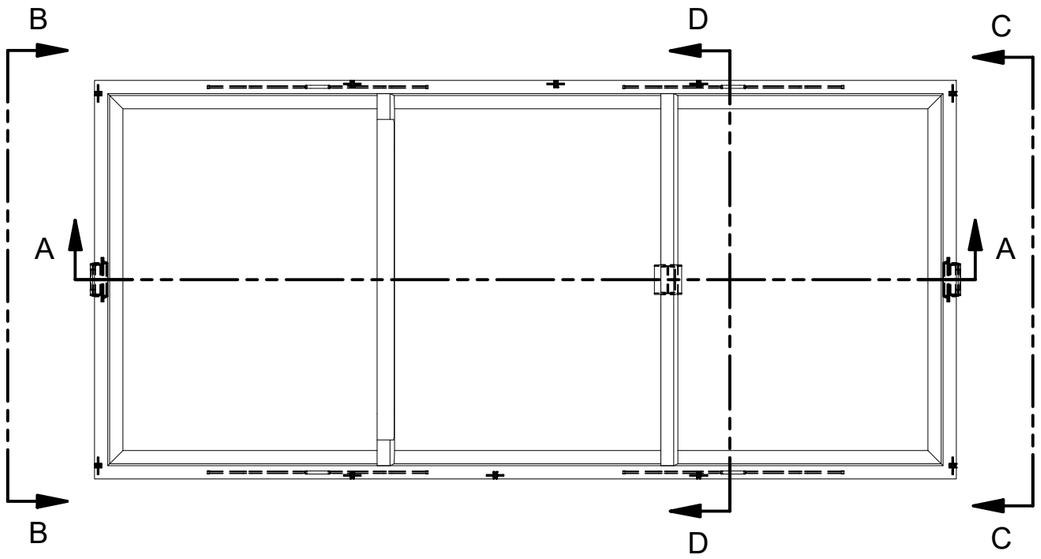

PLAN VIEW

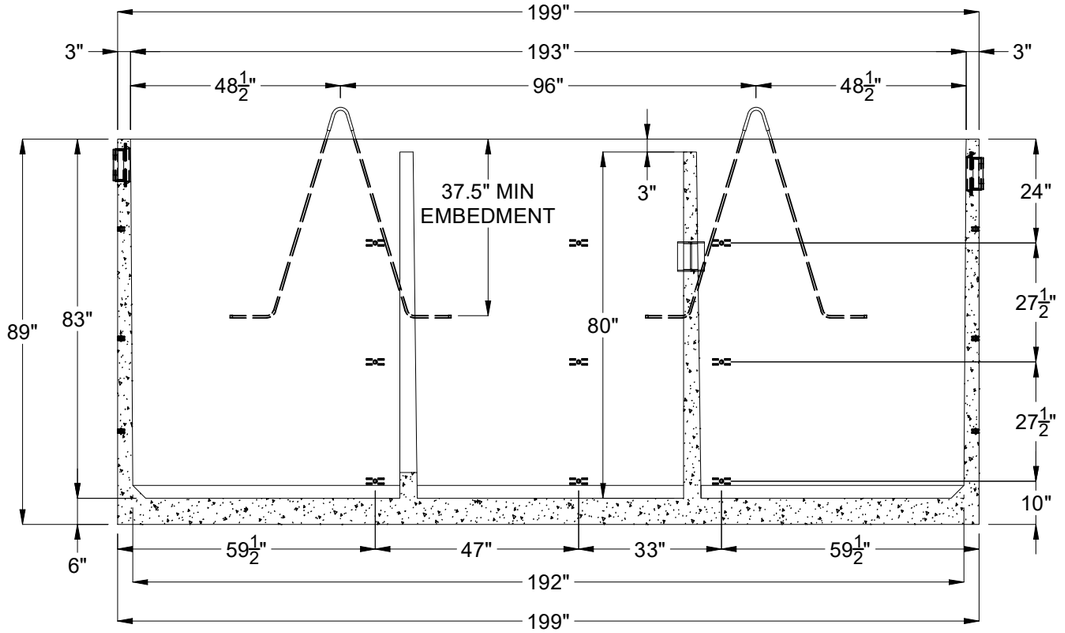

SECTION A-A

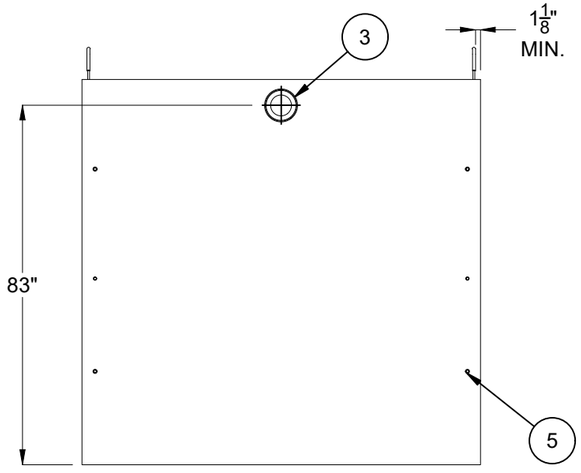

VIEW B-B

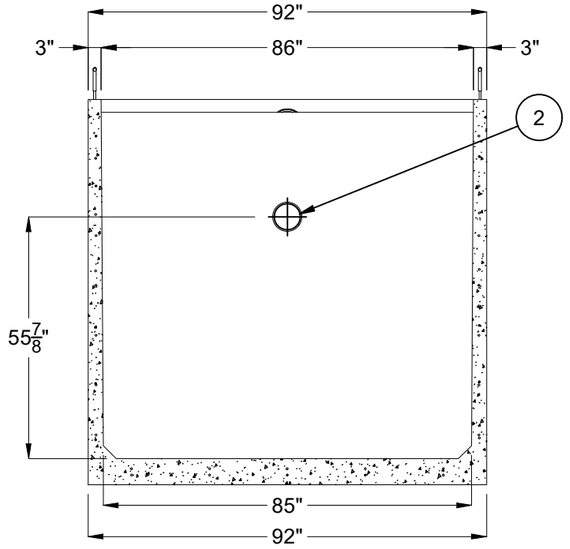

SECTION D-D

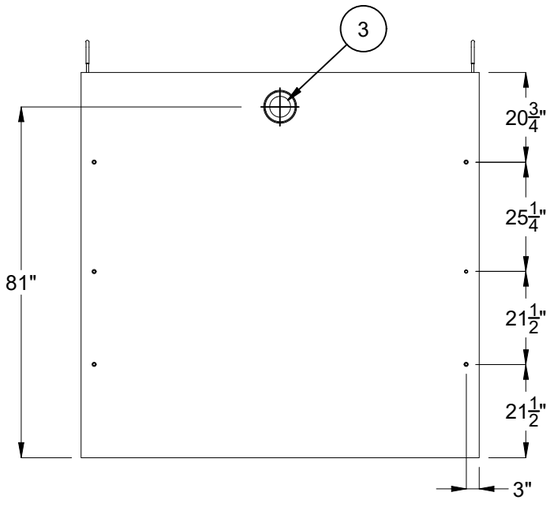

VIEW C-C

BURY DEPTH:	6.9' - 11.7' to Top		
WATER LEVEL:	Below Structure	WEIGHT:	25634.38 Lbs
DESIGN SPEC:	ASTM C890,ACI 318	LOADING SPEC:	A-16 (AASHTO HS20-44)
REINFORCEMENT TYPE:	Rebar	LIFTING TYPE:	Cable

JENSEN PRECAST EST. 1968

WWW.JENSENPRECAST.COM

©2018 Jensen Precast- All rights reserved.
All materials appearing as Jensen Precast documents and the like are proprietary work product and are protected under U.S. copyright and other laws.
Unless in conjunction with business conducted with Jensen Precast, any use of Jensen Precast work product without express, written consent is prohibited, and recipient is prohibited from distributing any and all work product to non-approved third parties under penalty of civil action.

DESCRIPTION: Tank JZ 5000 Gallon 6 Inch Rect. Bottom Section Single Baffle Admixture – BioConcrete
CASTING DRAWING

PART NUMBER:	200051662	DRAWN BY:	B. Gentry-Dunn
CREATED:	3/20/2018	MODIFIED:	5/20/2021

REV: A-1

SHEET: 2 OF 3

200051662.idw

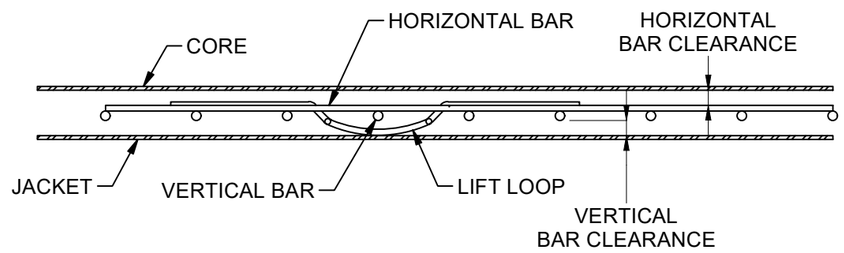

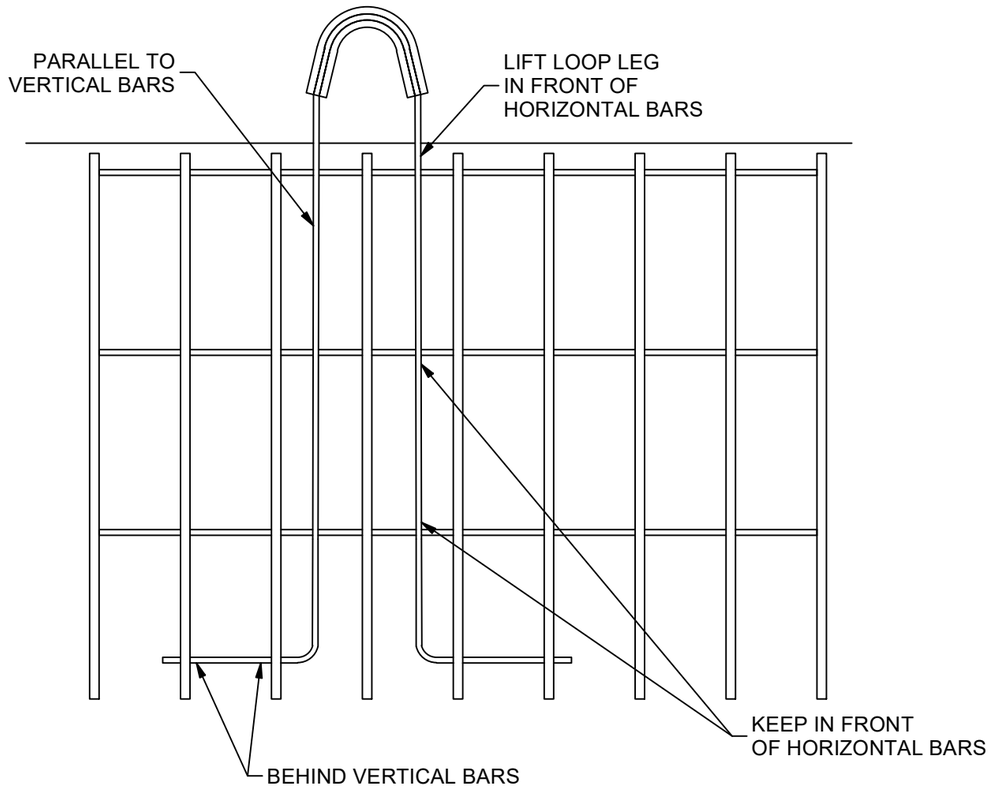

FOR USE WITH THIN WALL PROP CANTILEVER
TANKS WHERE SPECIFIED ON SHOP DRAWING.

BURY DEPTH: to		JENSEN PRECAST EST. 1968	©2018 Jensen Precast- All rights reserved. All materials appearing as Jensen Precast documents and the like are proprietary work product and are protected under U.S. copyright and other laws. Unless in conjunction with business conducted with Jensen Precast, any use of Jensen Precast work product without express, written consent is prohibited, and recipient is prohibited from distributing any and all work product to non-approved third parties under penalty of civil action.	DESCRIPTION: CABLE LOOP INSTALLATION DETAIL	REV: A-1
WATER LEVEL:	WEIGHT: Lbs	WWW.JENSENPRECAST.COM		PART NUMBER:	DRAWN BY: B. Gentry-Dunn
DESIGN SPEC:	LOADING SPEC:			CREATED:	MODIFIED: 5/20/2021
REINFORCEMENT TYPE:	LIFTING TYPE:				SHEET: 3 OF 3

200051662.idw