BILL OF MATERIALS

ITEM	QTY	PART NUMBER	DESCRIPTION
1	2	100002698	PIPE FITTING PVC SDR35 SAN TEE 6DIA
2	30.000 in	100002511	PIPE PVC 6IN DIA SDR35 ASTM D-3034 SOLVENT WELD SEWER DRAIN
3	1	100002710	FITTING PVC SDR35 6IN DIA 90 DEG ELBOW ASTM D-3034 SOLVENT WELD SEWER DRAIN

200051532.idw

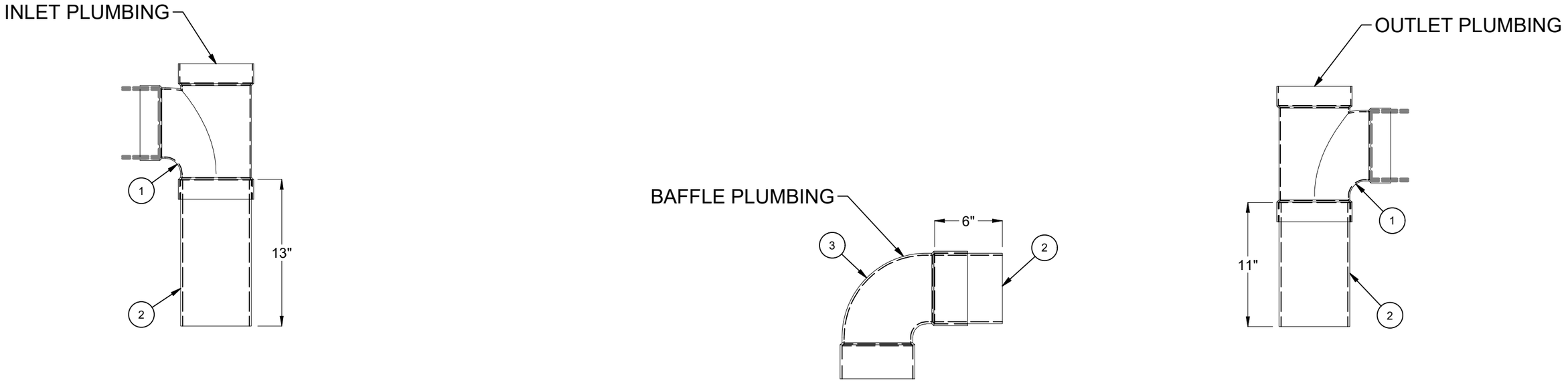

ELEVATION VIEW

BURY DEPTH:	to		
WATER LEVEL:	APPROX. WEIGHT:	9.17 Lbs	
DESIGN SPEC:	LOADING SPEC:		
AGENCY:	AGENCY SPEC:		

JENSEN PRECAST EST. 1968

WWW.JENSENPRECAST.COM

©2022 Jensen Precast- All rights reserved.
All materials appearing as Jensen Precast documents and the like are proprietary work product and are protected under U.S. copyright and other laws.
Unless in conjunction with business conducted with Jensen Precast, any use of Jensen Precast work product without express, written consent is prohibited, and recipient is prohibited from distributing any and all work product to non-approved third parties under penalty of civil action.

DESCRIPTION: 200051531 Plumbing - JP 1500 6 Inch Septic 24"E, 24"E Single Baffle BioConcrete

PLUMBING LAYOUT

PART NUMBER:	200051532	DRAWN BY:	E. Fine
CREATED:	2/2/2021	MODIFIED:	6/28/2022

REV: B-1

SHEET: 1 OF 1