DESIGN NOTES:

- CONCRETE SHALL HAVE A 28 DAY MINIMUM COMPRESSIVE STRENGTH OF 7000 PSI
- SOIL UNIT WEIGHT DRY - 110 lbs/cu.ft.
- EQUIVALENT LATERAL PRESSURE DRY - 40 lbs/cu.ft.
- SOIL UNIT WEIGHT WET - 120 lbs/cu.ft.
- EQUIVALENT LATERAL PRESSURE WET - 80 lbs/cu.ft.

PRODUCTION NOTES:

- THIS PRODUCT SHALL ONLY BE PRODUCED IN A JENSEN INFRASTRUCTURE FACILITY
- LIFTING INSERTS SHALL BE INSTALLED PER MANUFACTURER'S REQUIREMENTS
- APPLIED FINISH - NONE
- INTERNAL LINER/COATING - NONE
- EXTERNAL LINER/COATING - NONE

BILL OF MATERIALS

ITEM	QTY	PART NUMBER	DESCRIPTION
1	50.911 ft^3	100011429	CONCRETE MIX GENERIC 7000 PSI
2	4	100003026	PULL IRON OFFSET .875DIA 6 IH X 10.875L X 6.75W GALV
3	2	100040738	GROUND INSERTS BOTTLE ROCKET BRONZE 1/2X36 STEEL ROD 12G69
4	4	100044092	STRUT C-CHANNEL 13/16 X 1-5/8 16GA SOLID GALV SHALLOW W-400/P4000 - 24IN
5	8	100042535	ANCHOR FLEET-LIFT 4T T-ANCHOR P94 FL848G DAYTON - GALV
6	1	300127518	REINFORCING MAT 300127518
7	4	100044095	STRUT C-CHANNEL 13/16 X 1-5/8 16GA SOLID GALV SHALLOW W-400/P4000 - 60IN

200051356.idw

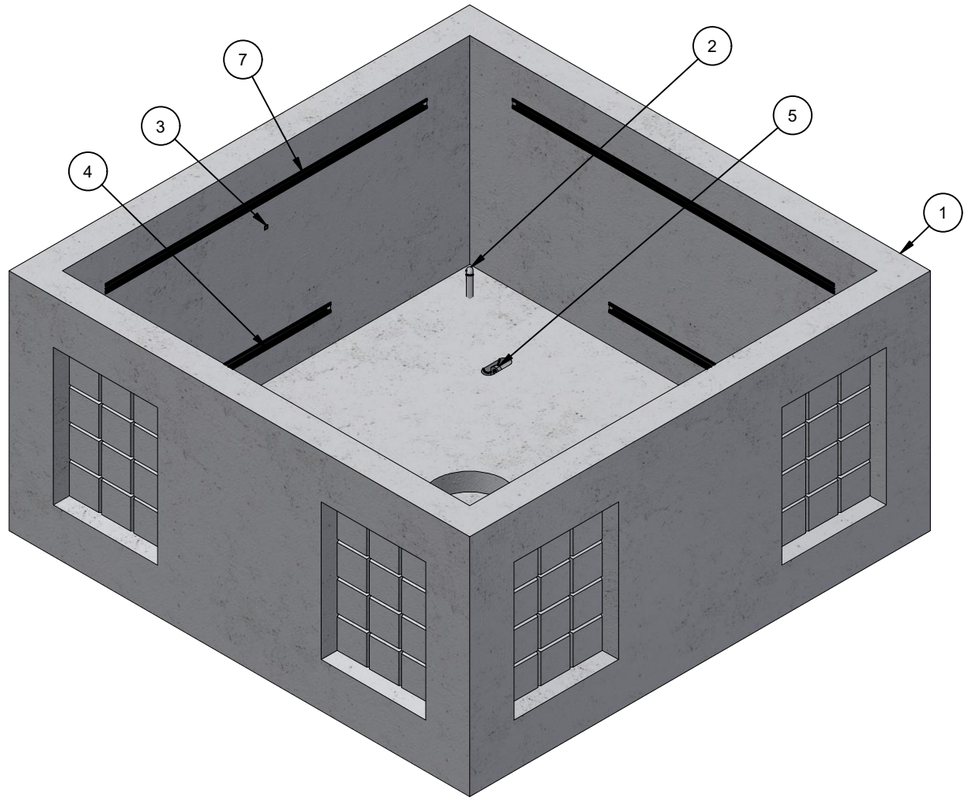

ISO VIEW

RIGGING DIAGRAM* | B

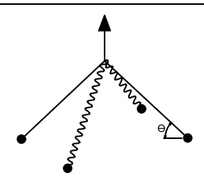

LIFTING NOTES

■ THIS CONCRETE PRODUCT IS DESIGNED TO BE LIFTED AT 3500 PSI WITH 4 LIFT CONNECTIONS EQUALLY LOADED TO 2 LIFTING POINTS AT A MINIMUM 60° SLING ANGLE, MEASURED FROM HORIZONTAL.

*All rigging shall be design by a qualified professional. Loading diagrams show illustrations of possible rigging setups to achieve the required sling angle and load leg equalization. Other valid rigging configurations are possible. A qualified professional must be consulted prior to lifting.

BURY DEPTH:	0.0' - 5.0' to Top		
WATER LEVEL:	5.0'	APPROX. WEIGHT:	7735.6 Lbs
DESIGN SPEC:	ACI 318,ASTM C857	LOADING SPEC:	A-16 (AASHTO HS20-44)
REINFORCEMENT TYPE:	Rebar	LIFTING TYPE:	Tech Erection Anchor

Infrastructure
JENSEN
WWW.JENSENPRECAST.COM

©2026 Jensen Infrastructure - All rights reserved.
All materials appearing as Jensen Infrastructure documents and the like are proprietary work product and are protected under U.S. copyright and other laws.
Unless in conjunction with business conducted with Jensen Infrastructure , any use of Jensen Infrastructure work product without express, written consent is prohibited, and recipient is prohibited from distributing any and all work product to non-approved third parties under penalty of civil action. This product shall only be produced in a Jensen Infrastructure facility.

CHANGE HISTORY

NO.	DESCRIPTION	DATE	BY
B-1-1	PSE APPROVAL	6/10/2025	JW
B-1-3	TRANSFERRED GROUNDING BAR TO REINFORCING CAGE	6/26/2025	AMV
B-1-4	2610-61773-1 PROD. REQUESTED CAGE ADJUSTMENTS	11/02/2026	EDC

DESCRIPTION: Vault 7676x37 Rect. Bottom Section Knockout Sump PSE

CASTING LAYOUT

REV: B-1-4

PART NUMBER:	200051356	DRAWN BY:	E CAMERON
CREATED:	3/30/2021	MODIFIED:	11/3/2026

SHEET: 1 OF 2

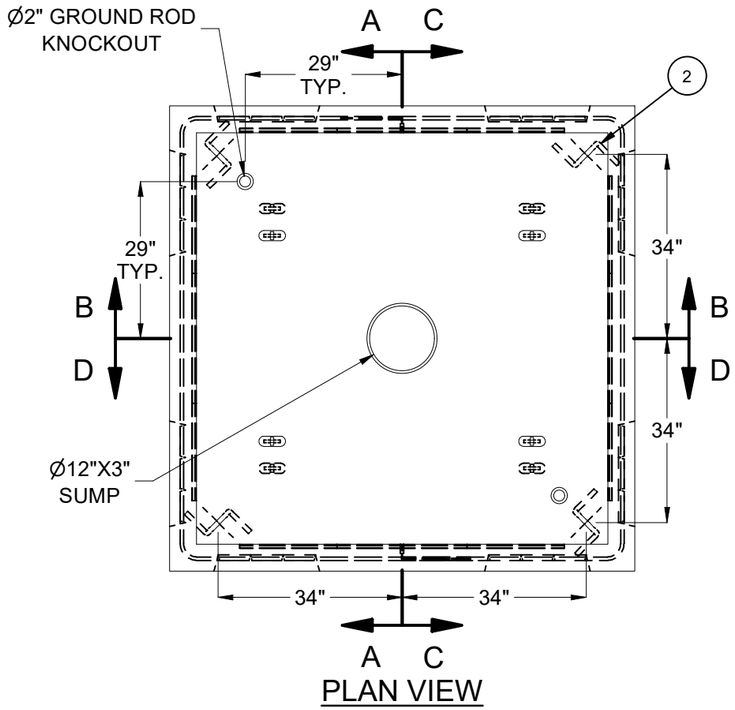

PLAN VIEW

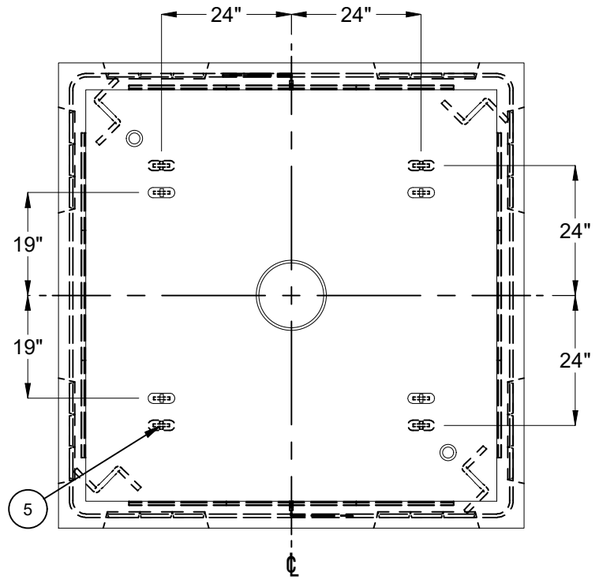

PLAN VIEW
(SHOWING DEMOLDING &
HANDLING LIFTING)

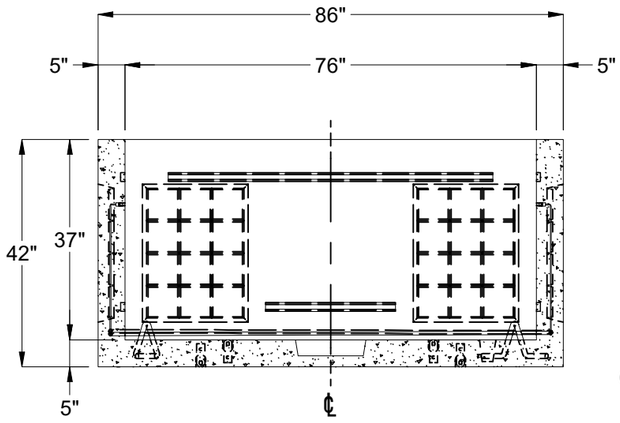

SECTION A-A

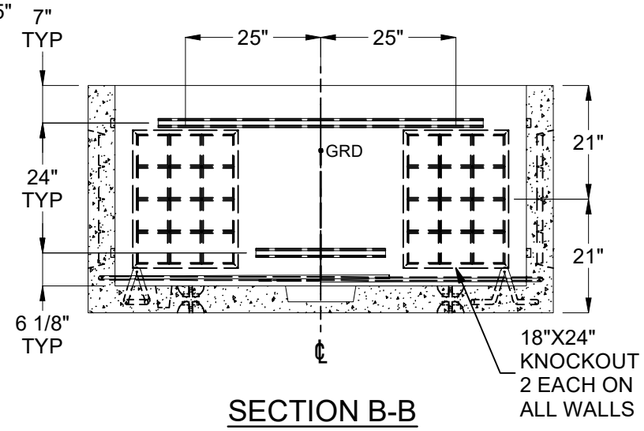

SECTION B-B

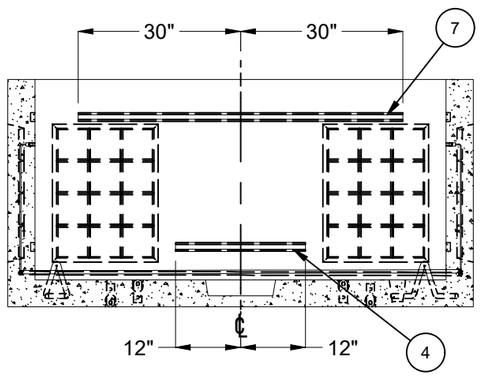

SECTION C-C

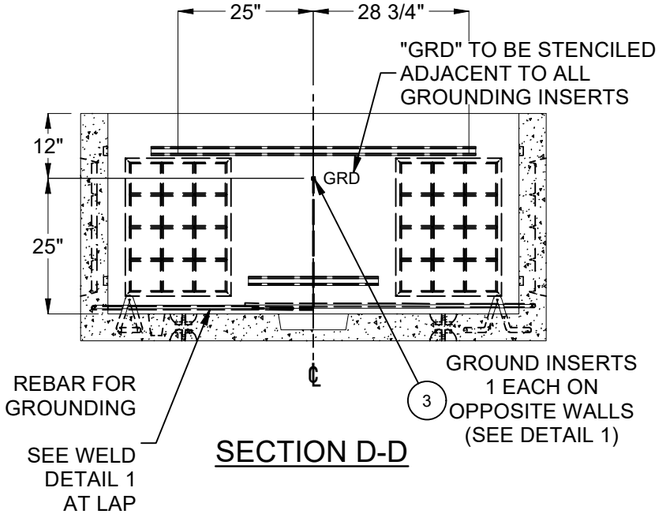

SECTION D-D

BURY DEPTH:	0.0' - 5.0' to Top		
WATER LEVEL:	5.0'	APPROX. WEIGHT:	7735.6 Lbs
DESIGN SPEC:	ACI 318,ASTM C857	LOADING SPEC:	A-16 (AASHTO HS20-44)
REINFORCEMENT TYPE:	Rebar	LIFTING TYPE:	Tech Erection Anchor

Infrastructure
JENSEN
WWW.JENSENPRECAST.COM

©2026 Jensen Infrastructure - All rights reserved.
All materials appearing as Jensen Infrastructure documents and the like are proprietary work product and are protected under U.S. copyright and other laws.
Unless in conjunction with business conducted with Jensen Infrastructure , any use of Jensen Infrastructure work product without express, written consent is prohibited, and recipient is prohibited from distributing any and all work product to non-approved third parties under penalty of civil action. This product shall only be produced in a Jensen Infrastructure facility.

DESCRIPTION:	Vault 7676x37 Rect. Bottom Section Knockout Sump PSE CASTING DRAWING		REV: B-1-4
PART NUMBER:	200051356	DRAWN BY:	E CAMERON
CREATED:	3/30/2021	MODIFIED:	11/3/2026
			SHEET: 2 OF 2

200051356.idw