NOTES
■ FOR COMPLETE DESIGN AND PRODUCT INFORMATION CONTACT JENSEN PRECAST.

BILL OF MATERIALS

ITEM	QTY	PART NUMBER	DESCRIPTION
1	203.853 ft^3	100002728	CONCRETE MIX GENERIC 4000 PSI
2	1	200050898	WWR REINFORCING CAGE 200050898
3	4	100007133	ANCHOR UTILITY .671DIA 7.625-SLAB GALV P75 8UA671

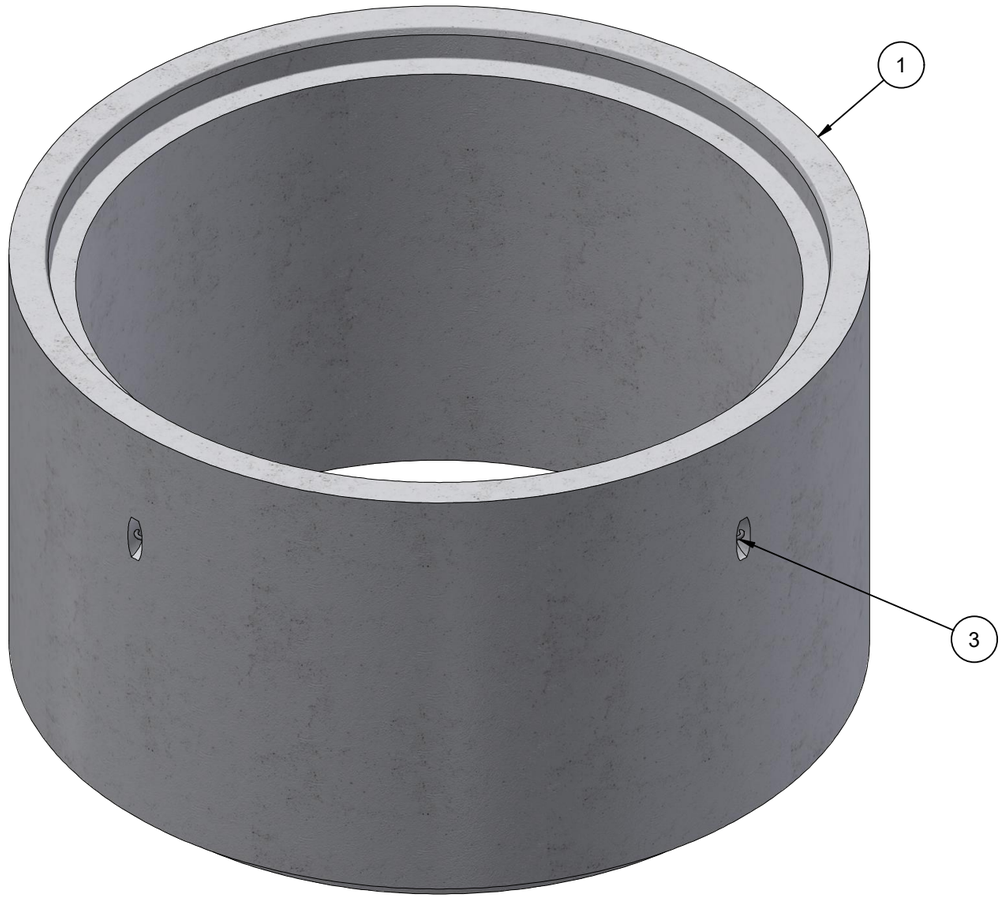

ISOMETRIC VIEW

200050897.idw

LIFTING NOTES
■ THIS CONCRETE PRODUCT IS DESIGNED TO BE LIFTED AT 2500 PSI WITH 4 LIFT CONNECTIONS EQUALLY LOADED TO 4 LIFTING POINTS AT A MINIMUM 60° SLING ANGLE, MEASURED FROM HORIZONTAL.

BURY DEPTH:	0.0' - 99.0' to Top		
WATER LEVEL:	0.0'	WEIGHT:	30642.3 Lbs
DESIGN SPEC:	ASTM C478	LOADING SPEC:	A-16 (AASHTO HS20-44)
REINFORCEMENT TYPE:	WWR Plain	LIFTING TYPE:	A-Anchor

JENSEN PRECAST EST. 1968

WWW.JENSENPRECAST.COM

©2019 Jensen Precast- All rights reserved.
All materials appearing as Jensen Precast documents and the like are proprietary work product and are protected under U.S. copyright and other laws.
Unless in conjunction with business conducted with Jensen Precast, any use of Jensen Precast work product without express, written consent is prohibited, and recipient is prohibited from distributing any and all work product to non-approved third parties under penalty of civil action.

REVISION HISTORY			
NO.	DESCRIPTION	DATE	BY
A	INITIAL RELEASE	04/06/2021	VGL
B	UPDATE REBAR	04/27/21	MBE
C	CHANGED LIFTING TO 4 PICK POINTS	08/27/2021	VGL

DESCRIPTION:	Manhole D120142x78 Barrel GU CASTING LAYOUT			REV: C-1
PART NUMBER:	200050897	DRAWN BY:	V. Lund	SHEET: 1 OF 2
CREATED:	4/10/2019	MODIFIED:	8/27/2021	

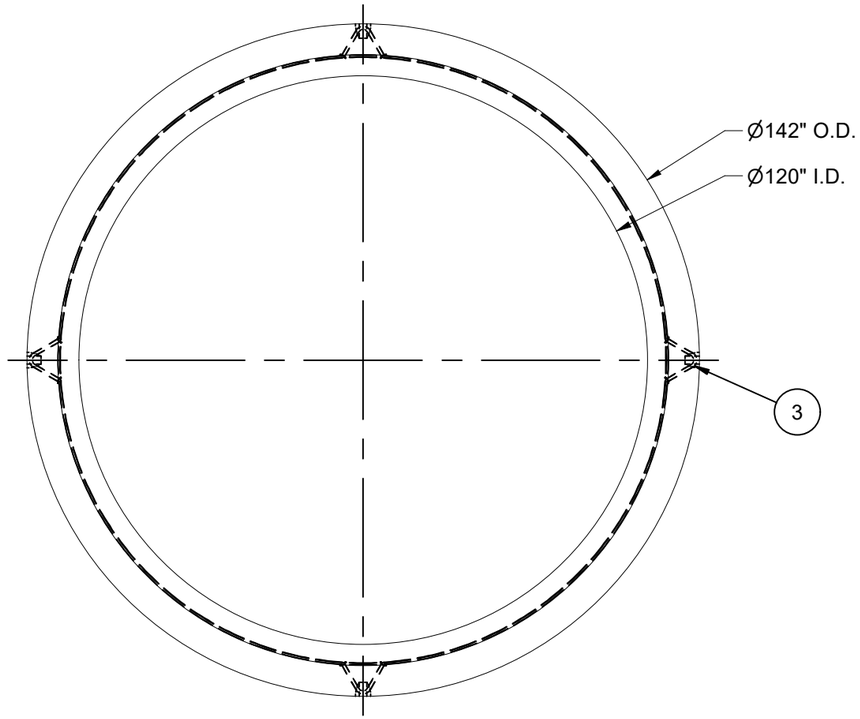

TOP VIEW

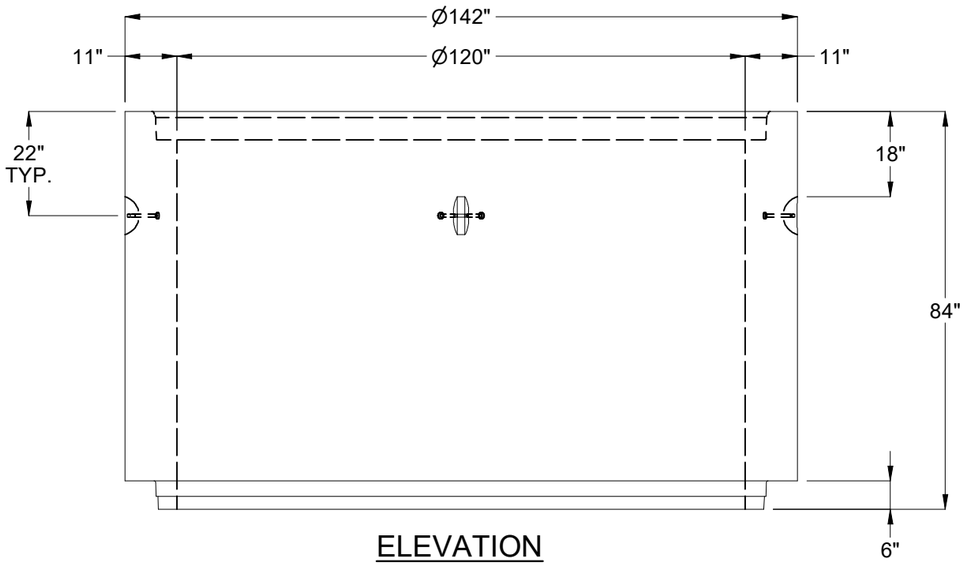

ELEVATION

BURY DEPTH:	0.0' - 99.0' to Top		
WATER LEVEL:	0.0'	WEIGHT:	30642.3 Lbs
DESIGN SPEC:	ASTM C478	LOADING SPEC:	A-16 (AASHTO HS20-44)
REINFORCEMENT TYPE:	WWR Plain	LIFTING TYPE:	A-Anchor

JENSEN PRECAST EST. 1968

WWW.JENSENPRECAST.COM

©2019 Jensen Precast- All rights reserved.
All materials appearing as Jensen Precast documents and the like are proprietary work product and are protected under U.S. copyright and other laws.
Unless in conjunction with business conducted with Jensen Precast, any use of Jensen Precast work product without express, written consent is prohibited, and recipient is prohibited from distributing any and all work product to non-approved third parties under penalty of civil action.

DESCRIPTION:	Manhole D120142x78 Barrel GU CASTING DRAWING		REV: C-1
PART NUMBER:	200050897	DRAWN BY:	V. Lund
CREATED:	4/10/2019	MODIFIED:	8/27/2021

SHEET: 2 OF 2

200050897.idw