BILL OF MATERIALS

ITEM	QTY	PART NUMBER	DESCRIPTION
1	3	100002697	PIPE FITTING PVC SDR35 SAN TEE 4DIA
2	107.250 in	100002510	PIPE PVC 4IN DIA SDR35 ASTM D-3034 SOLVENT WELD SEWER DRAIN

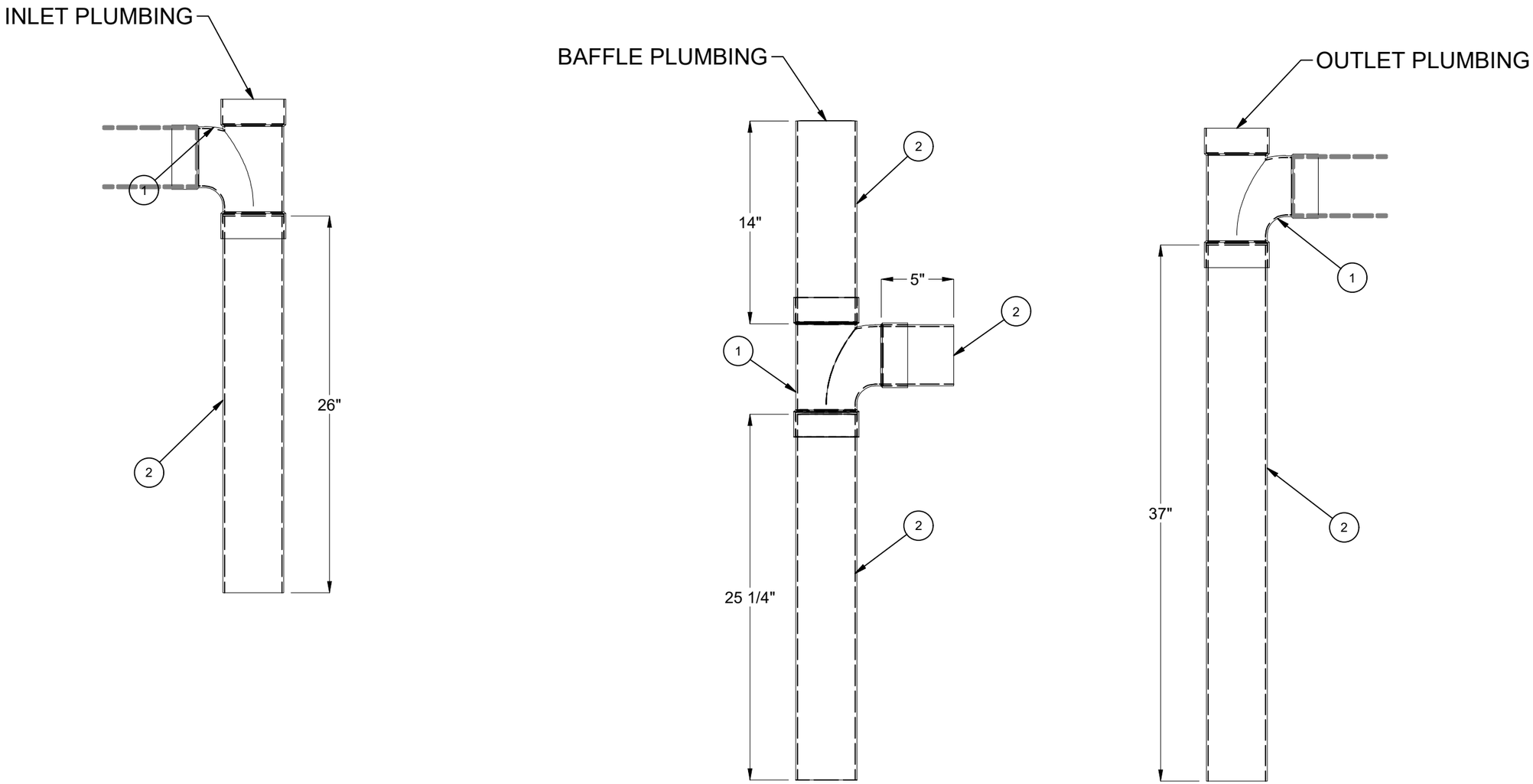

ELEVATION VIEW

BURY DEPTH:	to		
WATER LEVEL:	APPROX. WEIGHT:	10.06 Lbs	
DESIGN SPEC:	LOADING SPEC:		
AGENCY:	AGENCY SPEC:		

JENSEN PRECAST EST. 1968

WWW.JENSENPRECAST.COM

©2022 Jensen Precast- All rights reserved.
All materials appearing as Jensen Precast documents and the like are proprietary work product and are protected under U.S. copyright and other laws.
Unless in conjunction with business conducted with Jensen Precast, any use of Jensen Precast work product without express, written consent is prohibited, and recipient is prohibited from distributing any and all work product to non-approved third parties under penalty of civil action.

DESCRIPTION: 200050583 Plumbing - JP 750 4 Inch Gravity Grease Interceptor 24"E, 24"C, 24"E Single Baffle BioConcrete PLUMBING LAYOUT			REV: B-1
PART NUMBER:	200050584	DRAWN BY: E. Fine	SHEET: 1 OF 1
CREATED:	2/4/2021	MODIFIED: 6/29/2022	

200050584.idw