NOTES
■ IN COMPLIANCE WITH UNIFORM PLUMBING CODE (UPC), INTERNATIONAL PLUMBING CODE (IPC), ASTM INTERNATIONAL C1613
■ JENSEN PRECAST'S PRODUCT IS LISTED BY IAPMO R&T TO STANDARD Z1001 MODEL JP-1500-EBE-G
■ MINIMUM ONE (1) ACCESS OPENING PER COMPARTMENT REQUIRED (AS SHOWN). ADDITIONALACCESS CAN BE ADDED IN LIEU OF PLUG COVER WHEN REQUIRED BY THE AUTHORITY HAVING JURISDICITON.
■ MUST BE INSTALLED PER "JENSEN PRECAST UNDERGROUND WASTEWATER PRECAST CONCRETE TANK INSTALLATION PROCEDURE" WHICH CAN BE FOUND AT https://www.jensenprecast.com/Tank-Installation-Procedure-d2106.pdf. THIS PROCEDURE ADDRESSES REQUIRED EXCAVATION, SITE PREPARATION, INSTALLATION, VENTILATION, AND WATER/VACCUM TESTING

BILL OF MATERIALS

ITEM	QTY	PART NUMBER	DESCRIPTION	WEIGHT (LBS)
1	1	200050545	Tank JP 1500 Gallon 4 Inch Assembly 24"E, 24"B, 24"E Single Baffle Admixture – BioConcrete	17154
2	1	200050550	200050551 Plumbing - JP 1500 4 Inch Gravity Grease Interceptor 24"E, 24"B, 24"E Single Baffle BioConcrete	10
3	JOB SPECIFIC	100005850	CI RINGCOVER 24DIA B-5105-02/B-5105-R2 ASTM A48 CL35B CP O-RING GASKET OSI JENSEN/INTERCEPT	196
4	JOB SPECIFIC	100001524	Grade Ring D2432x3	87
5	JOB SPECIFIC	100001525	Grade Ring D2432x6	180
6	JOB SPECIFIC	100001526	Grade Ring D2432x12	365
7	JOB SPECIFIC	100012046	Plug Cover D2428x6 Slab Top	300

200050551.idw

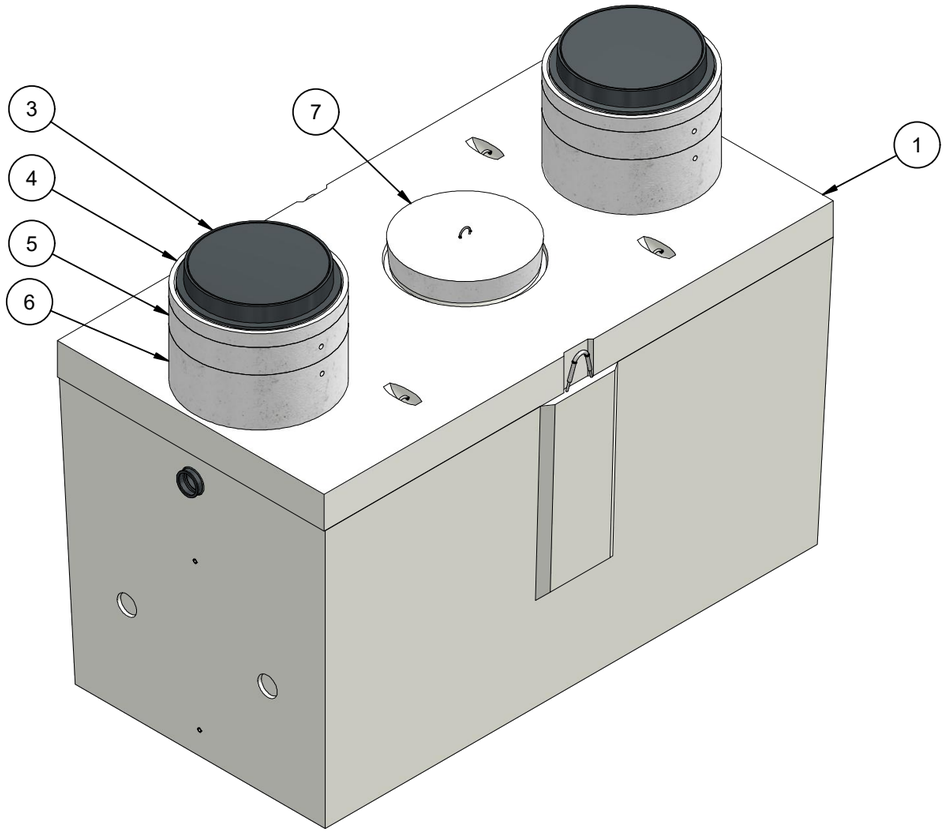

ISO LAYOUT

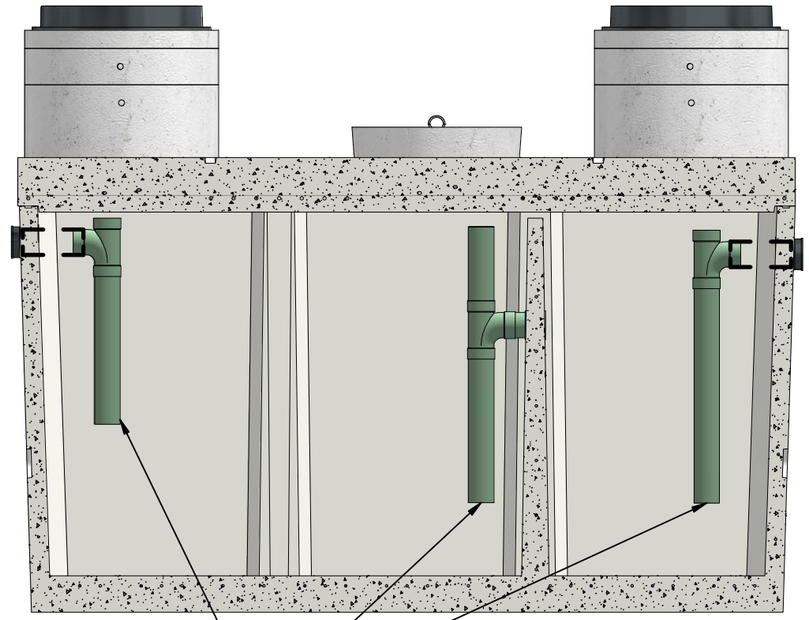

SECTION

MODEL:
JP-1500-EBE-G

REVISION HISTORY			
REV	DESCRIPTION	DATE	BY
A	DRAWING CREATED	3/26/2021	BGD
B	PRODUCT WEIGHT UPDATED	5/4/2021	BGD
C	ACCESSORIES UPDATED	6/29/2022	E.FINE

BURY DEPTH:	1.1' - 6.0' to Top		
WATER LEVEL:	Below Structure	WEIGHT:	19126.96 Lbs
DESIGN SPEC:	ASTM C890,ACI 318	LOADING SPEC:	A-16 (AASHTO HS20-44)
REINFORCEMENT TYPE:		LIFTING TYPE:	

JENSEN PRECAST EST. 1968

WWW.JENSENPRECAST.COM

©2018 Jensen Precast- All rights reserved.
All materials appearing as Jensen Precast documents and the like are proprietary work product and are protected under U.S. copyright and other laws.
Unless in conjunction with business conducted with Jensen Precast, any use of Jensen Precast work product without express, written consent is prohibited, and recipient is prohibited from distributing any and all work product to non-approved third parties under penalty of civil action.

DESCRIPTION: Tank JP 1500 Gallon 4 Inch Layout Gravity Grease Interceptor 24"E, 24"B, 24"E Single Baffle Admixture – BioConcrete LAYOUT REVIEW			REV: C-2
PART NUMBER:	200050551	DRAWN BY:	E. Fine
CREATED:	3/26/2021	MODIFIED:	6/29/2022
			SHEET: 1 OF 2

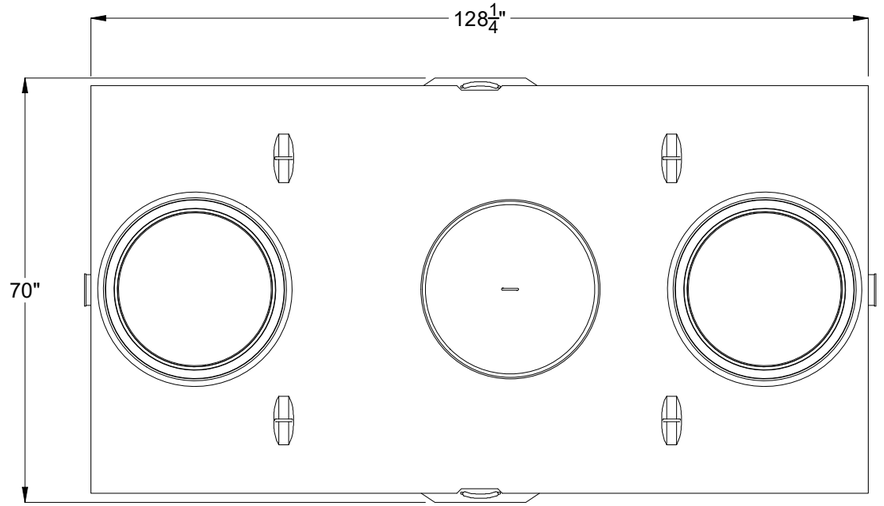

PLAN VIEW

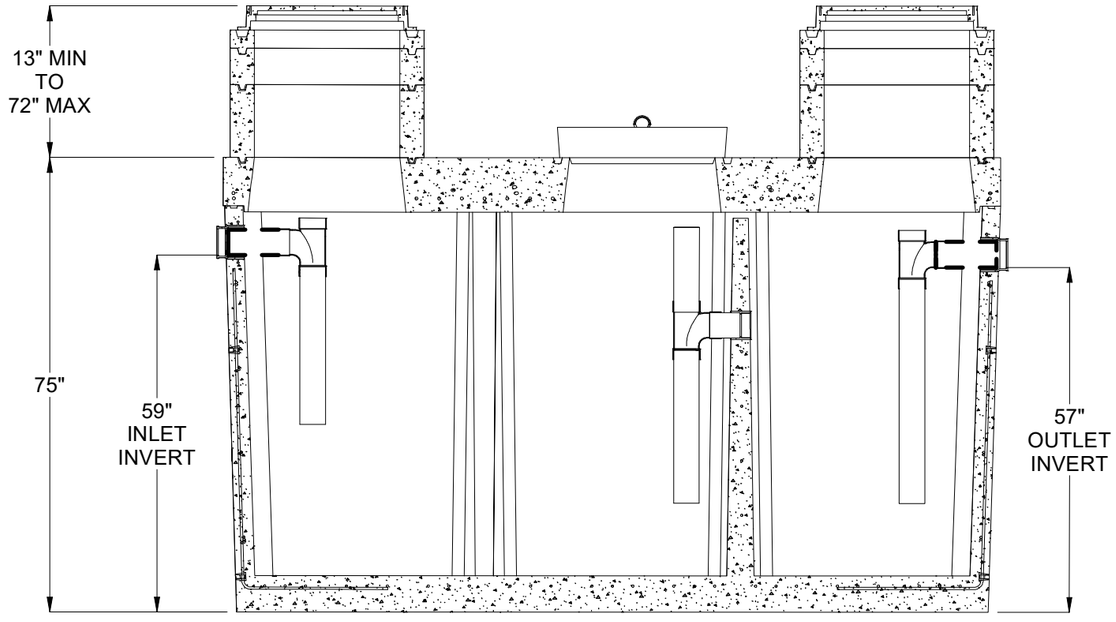

CROSS SECTION

BURY DEPTH:	1.1' - 6.0' to Top		
WATER LEVEL:	Below Structure	WEIGHT:	19126.96 Lbs
DESIGN SPEC:	ASTM C890,ACI 318	LOADING SPEC:	A-16 (AASHTO HS20-44)
REINFORCEMENT TYPE:		LIFTING TYPE:	

JENSEN PRECAST EST. 1968

WWW.JENSENPRECAST.COM

©2018 Jensen Precast- All rights reserved.
All materials appearing as Jensen Precast documents and the like are proprietary work product and are protected under U.S. copyright and other laws.
Unless in conjunction with business conducted with Jensen Precast, any use of Jensen Precast work product without express, written consent is prohibited, and recipient is prohibited from distributing any and all work product to non-approved third parties under penalty of civil action.

DESCRIPTION:
Tank JP 1500 Gallon 4 Inch Layout Gravity Grease Interceptor 24"E, 24"B, 24"E Single Baffle Admixture – BioConcrete
LAYOUT DRAWING

PART NUMBER:	200050551	DRAWN BY:	E. Fine
CREATED:	3/26/2021	MODIFIED:	6/29/2022

REV: C-2

SHEET: 2 OF 2

200050551.idw