DESIGN NOTES
■ MINIMUM EXCAVATION SIZE:9'-2" X 6'-1" DEPTH REQ'D.
■ FOR COMPLETE DESIGN AND PRODUCT INFORMATION CONTACT JENSEN PRECAST.

BILL OF MATERIALS

ITEM	QTY	PART NUMBER	DESCRIPTION
1	1	200050080	Tank JP 1000 Gallon 4 Inch Rect. Bottom Section Single Baffle Admixture – BioConcrete
2	1	200050249	Tank JP 1000 Gallon x 5 Slab Top 24 EE Admixture – BioConcrete
3	2	100013648	SEALANT JOINT BUTYL RUBBER ASTM C-990 AND M198 CS-102 1IN EQUIV X14.5FT PER ROLL

200050537.idw

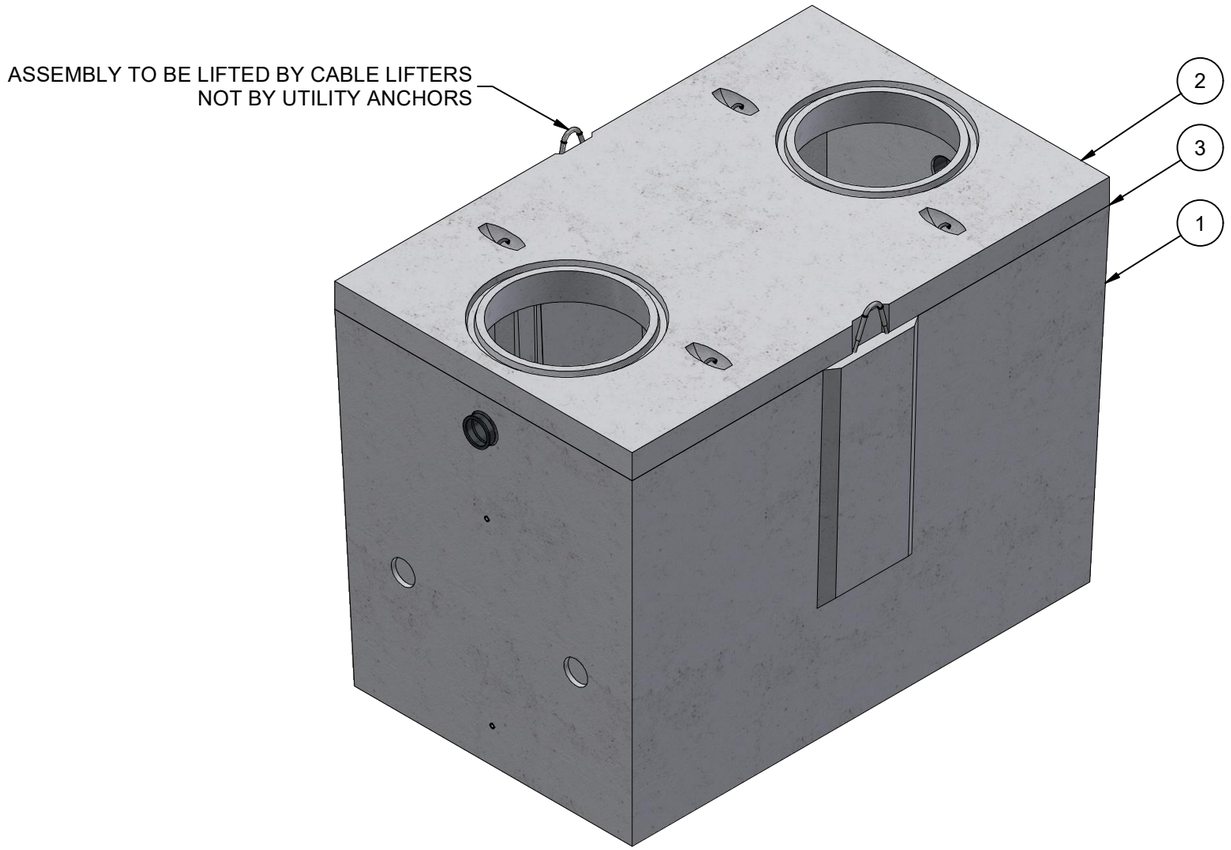

ISO LAYOUT

LIFTING NOTES
■ FIELD INSTALLATION: PLANT DEMOLDING: MINIMUM HANDLING CONCRETE STRENGTH F'c = 2500 PSI RIGGING EQUALIZER REQUIRED TO EQUALIZE LOAD TO 2 LIFTING POINTS WITH A SLING ANGLE OF 90°

REVISION HISTORY			
REV	DESCRIPTION	DATE	BY
A	DRAWING CREATED	3/26/2021	BGD
B	PRODUCT WEIGHT UPDATED	5/3/2021	BGD

BURY DEPTH:	1.1' - 6.0' to Top		
WATER LEVEL:	Below Structure	WEIGHT:	11656.55 Lbs
DESIGN SPEC:	ASTM C890,ACI 318	LOADING SPEC:	A-16 (AASHTO HS20-44)
REINFORCEMENT TYPE:		LIFTING TYPE:	Cable

JENSEN PRECAST EST. 1968

WWW.JENSENPRECAST.COM

©2018 Jensen Precast- All rights reserved.
All materials appearing as Jensen Precast documents and the like are proprietary work product and are protected under U.S. copyright and other laws.
Unless in conjunction with business conducted with Jensen Precast, any use of Jensen Precast work product without express, written consent is prohibited, and recipient is prohibited from distributing any and all work product to non-approved third parties under penalty of civil action.

DESCRIPTION:	Tank JP 1000 Gallon 4 Inch Assembly 24"E, 24"E Single Baffle Admixture – BioConcrete LAYOUT REVIEW		REV: B-1
PART NUMBER:	200050537	DRAWN BY:	B. Gentry-Dunn
CREATED:	11/20/2018	MODIFIED:	5/3/2021
			SHEET: 1 OF 1