NOTES
■ MINIMUM EXCAVATION SIZE: 10'-6" X 6'-6" DEPTH REQ'D.
■ FOR COMPLETE DESIGN AND PRODUCT INFORMATION CONTACT JENSEN PRECAST.

BILL OF MATERIALS

ITEM	QTY	PART NUMBER	DESCRIPTION
1	1	200025014	Tank MU 1200 Gallon 6 Inch Rect. Bottom Section AG
2	1	200025270	Vertical Slab Baffle MU 1200
3	1	200020474	Tank MU 500-1500 Gallon x 10 Slab Top 24"E, 24"E AG Tuf-Tite
4	3.000 ul	100013648	SEALANT JOINT BUTYL RUBBER ASTM C-990 AND M198 CS-102 1IN EQUIV X14.5FT PER ROLL

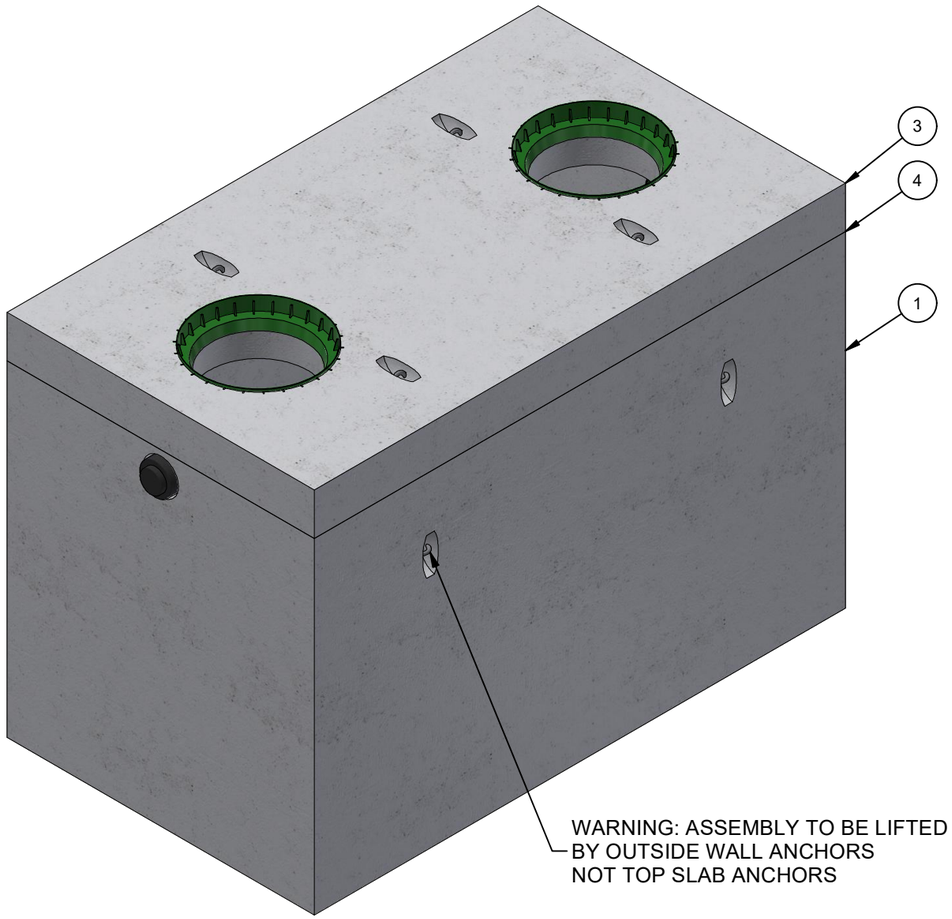

ISO LAYOUT

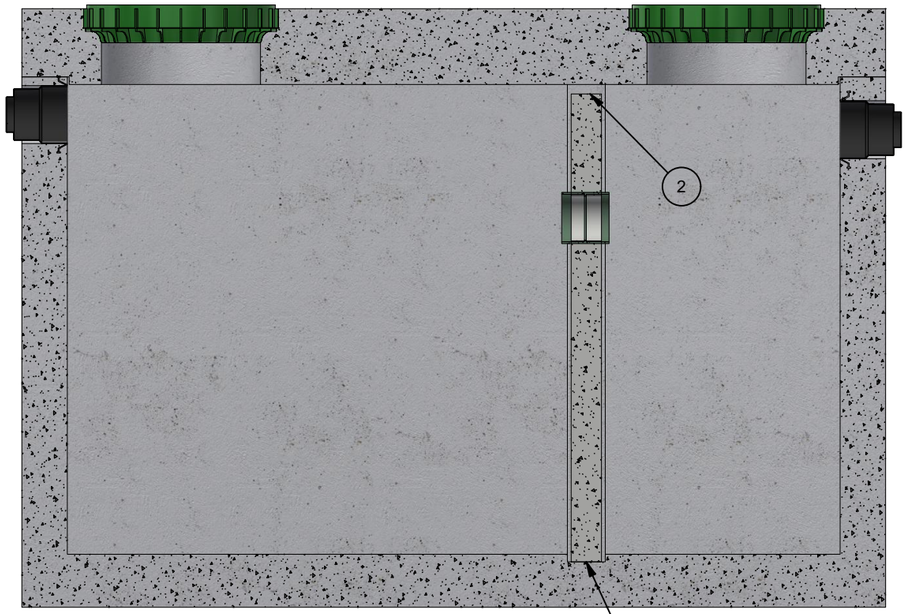

SECTION

LIFTING NOTES
■ THIS CONCRETE PRODUCT IS DESIGNED TO BE LIFTED AT 2500 PSI WITH 4 LIFT CONNECTIONS EQUALLY LOADED TO 2 LIFTING POINTS AT A MINIMUM 60° SLING ANGLE, MEASURED FROM HORIZONTAL.

CHANGE HISTORY			
REV	DESCRIPTION	DATE	BY
A	DRAWING CREATED	3/24/2021	T.Larson
B	DESCRIPTION/ PROPERTY UPDATES	5/9/2023	CF

BURY DEPTH:	Above Ground to N/A		
WATER LEVEL:	Below Structure	APPROX. WEIGHT:	22347.06 Lbs
DESIGN SPEC:	ACI 350,ASCE 7-10	LOADING SPEC:	Seismic
REINFORCEMENT TYPE:		LIFTING TYPE:	A-Anchor

JENSEN PRECAST EST. 1968

WWW.JENSENPRECAST.COM

©2023 Jensen Precast- All rights reserved.
All materials appearing as Jensen Precast documents and the like are proprietary work product and are protected under U.S. copyright and other laws.
Unless in conjunction with business conducted with Jensen Precast, any use of Jensen Precast work product without express, written consent is prohibited, and recipient is prohibited from distributing any and all work product to non-approved third parties under penalty of civil action.

DESCRIPTION:	Tank MU 1200 Gallon 6 Inch Assembly 24"E, 24"E Single Baffle AG CASTING LAYOUT		REV: B-1
PART NUMBER:	200050420	DRAWN BY:	T.Larson
CREATED:	2/1/2021	MODIFIED:	5/10/2023
			SHEET: 1 OF 1

200050420.idw