NOTES
■ IN COMPLIANCE WITH UNIFORM PLUMBING CODE (UPC), INTERNATIONAL PLUMBING CODE (IPC), AND STRUCTURAL LOADING REQUIREMENTS OF ASTM INTERNATIONAL C1227.
■ JENSEN PRECAST'S PRODUCT IS LISTED BY IAPMO R&T TO STANDARD Z1000. MODEL JS-1200-EE-ST
■ MINIMUM ONE (1) ACCESS OPENING PER COMPARTMENT REQUIRED (AS SHOWN).
■ MUST BE INSTALLED PER "JENSEN PRECAST UNDERGROUND WASTEWATER PRECAST CONCRETE TANK INSTALLATION PROCEDURE" WHICH CAN BE FOUND AT https://www.jensenprecast.com/Tank-Installation-Procedure-d2106.pdf. THIS PROCEDURE ADDRESSES REQUIRED EXCAVATION, SITE PREPARATION, INSTALLATION, VENTILATION, AND WATER/VACCUM TESTING

BILL OF MATERIALS

ITEM	QTY	PART NUMBER	DESCRIPTION	WEIGHT (LBS)
1	1	200050300	Tank JS 1200 Gallon 4 Inch Assembly 24"E, 24"E Tuf-Tite Single Baffle Admixture – BioConcrete	11593
2	1	200016487	JS 750-2500 4" PLUMBING ASSEMBLY SEPTIC INLET	2
3	1	200016488	JS 750-2500 4" PLUMBING ASSEMBLY SEPTIC OUTLET	2
4	JOB SPECIFIC	100006257	LID DOMED 24DIA PLASTIC TUFF-TITE RISL-24	4
5	JOB SPECIFIC	100006260	TANK RISER D24X6 PLASTIC TUFF-TITE 6-BOLTS 24-RIS	4
6	JOB SPECIFIC	100006262	TANK RISER D24X12 PLASTIC TUFF-TITE 6-BOLTS	7
7	JOB SPECIFIC	100012046	Plug Cover D2428x6 Slab Top	300

200050298.idw

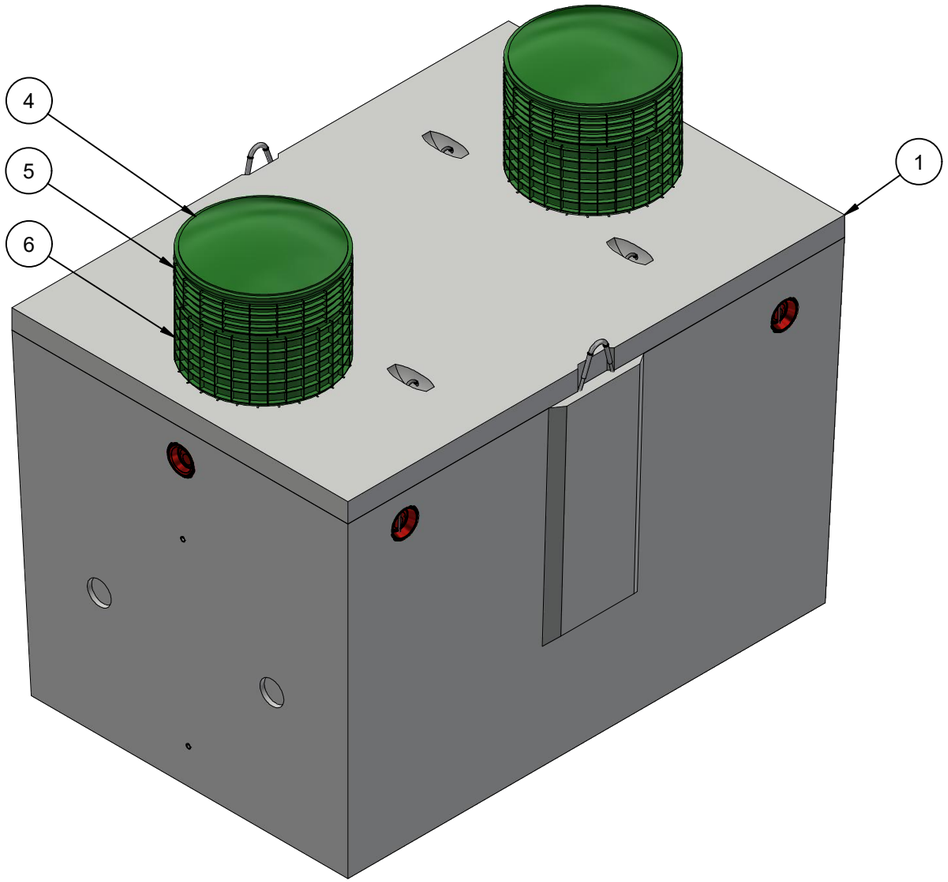

ISO LAYOUT

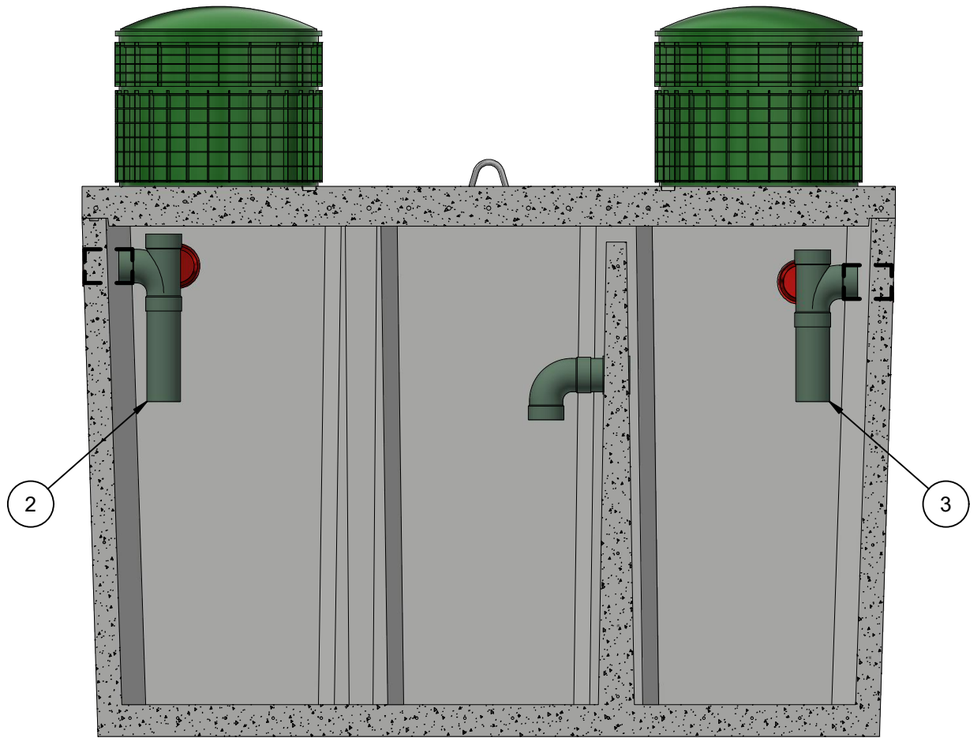

SECTION

MODEL:
JS-1200-EE-ST

REVISION HISTORY			
REV	DESCRIPTION	DATE	BY
A	DRAWING CREATED	3/23/2021	BGD
B	PRODUCT WEIGHT UPDATED	5/19/2021	BGD
C	SALES ASSEMBLY AND PLUMBING UPDATED	7/12/2022	E.FINE
D	TUFF-TITE RISERS AND LID	10-7-22	D. Hughes

BURY DEPTH:	0.0' - 3.0' to Top		
WATER LEVEL:	Below Structure	WEIGHT:	11926.57 Lbs
DESIGN SPEC:	ASTM C890,ACI 318	LOADING SPEC:	A-02 (200 psf)
REINFORCEMENT TYPE:		LIFTING TYPE:	

JENSEN PRECAST EST. 1968

WWW.JENSENPRECAST.COM

©2018 Jensen Precast- All rights reserved.
All materials appearing as Jensen Precast documents and the like are proprietary work product and are protected under U.S. copyright and other laws.
Unless in conjunction with business conducted with Jensen Precast, any use of Jensen Precast work product without express, written consent is prohibited, and recipient is prohibited from distributing any and all work product to non-approved third parties under penalty of civil action.

DESCRIPTION: Tank JS 1200 Gallon 4 Inch Layout Septic 24"E, 24"E Tuf-Tite Single Baffle Admixture – BioConcrete
LAYOUT REVIEW

REV: E-1

PART NUMBER:	200050298	DRAWN BY:	MLR
CREATED:	1/31/2019	MODIFIED:	10/7/2022

SHEET: 1 OF 2

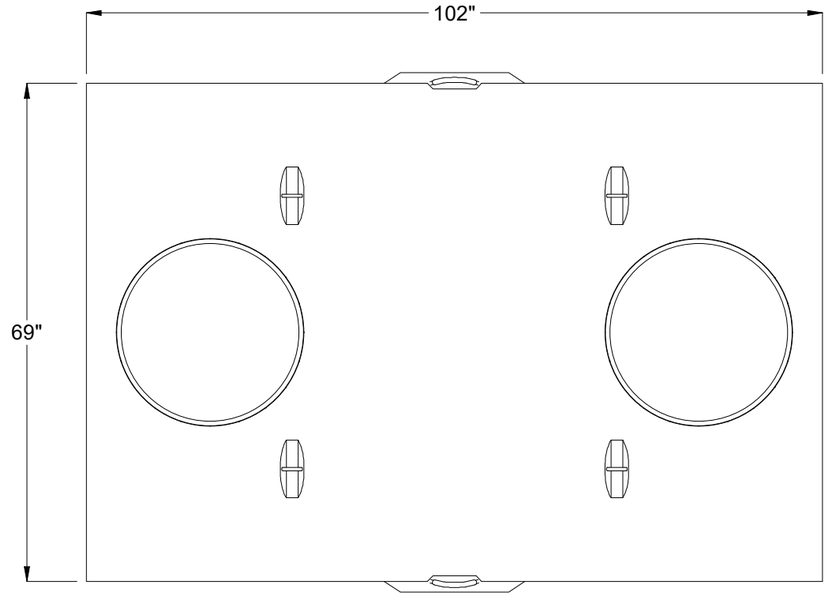

PLAN VIEW

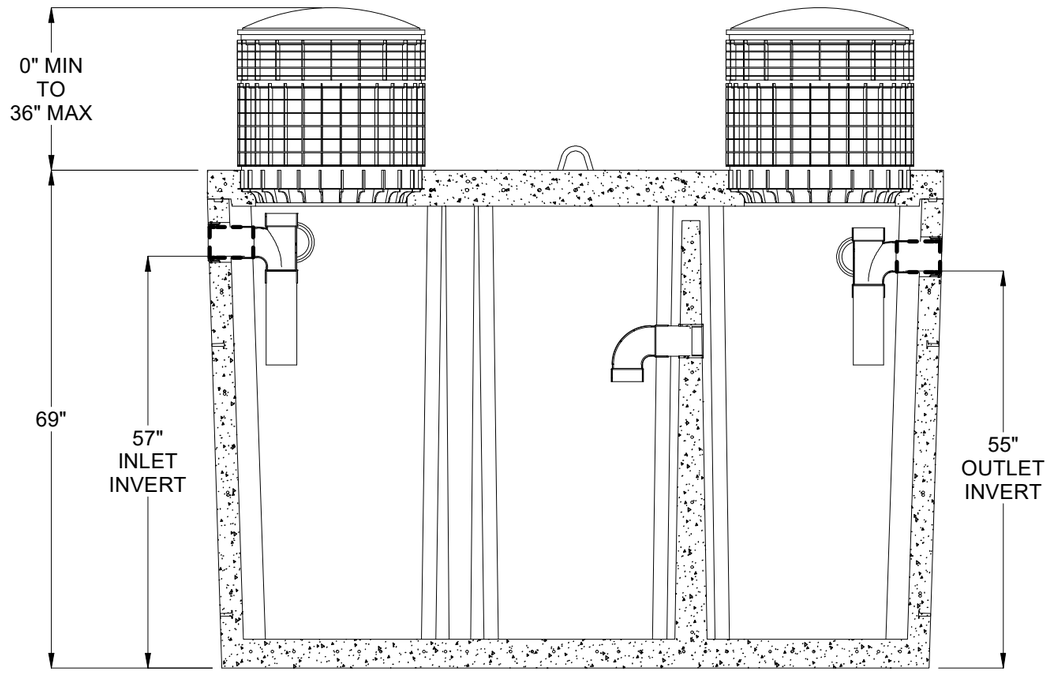

CROSS SECTION

BURY DEPTH:	0.0' - 3.0' to Top		
WATER LEVEL:	Below Structure	WEIGHT:	11926.57 Lbs
DESIGN SPEC:	ASTM C890,ACI 318	LOADING SPEC:	A-02 (200 psf)
REINFORCEMENT TYPE:		LIFTING TYPE:	

JENSEN PRECAST EST. 1968

WWW.JENSENPRECAST.COM

©2018 Jensen Precast- All rights reserved.
All materials appearing as Jensen Precast documents and the like are proprietary work product and are protected under U.S. copyright and other laws.
Unless in conjunction with business conducted with Jensen Precast, any use of Jensen Precast work product without express, written consent is prohibited, and recipient is prohibited from distributing any and all work product to non-approved third parties under penalty of civil action.

DESCRIPTION:	Tank JS 1200 Gallon 4 Inch Layout Septic 24"E, 24"E Tuf-Tite Single Baffle Admixture – BioConcrete LAYOUT DRAWING		REV: E-1
PART NUMBER:	200050298	DRAWN BY:	MLR
CREATED:	1/31/2019	MODIFIED:	10/7/2022
			SHEET: 2 OF 2

200050298.idw