## BILL OF MATERIALS

| ITEM | QTY | PART NUMBER | DESCRIPTION |
|---|---|---|---|
| 1 | 2 | 100002697 | PIPE FITTING PVC SDR35 SAN TEE 4DIA |
| 2 | 24.500 in | 100002510 | PIPE PVC 4IN DIA SDR35 ASTM D-3034 SOLVENT WELD SEWER DRAIN |
| 3 | 8.000 in | 100002511 | PIPE PVC 6IN DIA SDR35 ASTM D-3034 SOLVENT WELD SEWER DRAIN |
| 4 | 1 | 100002710 | FITTING PVC SDR35 6IN DIA 90 DEG ELBOW ASTM D-3034 SOLVENT WELD SEWER DRAIN |

200049942.idw

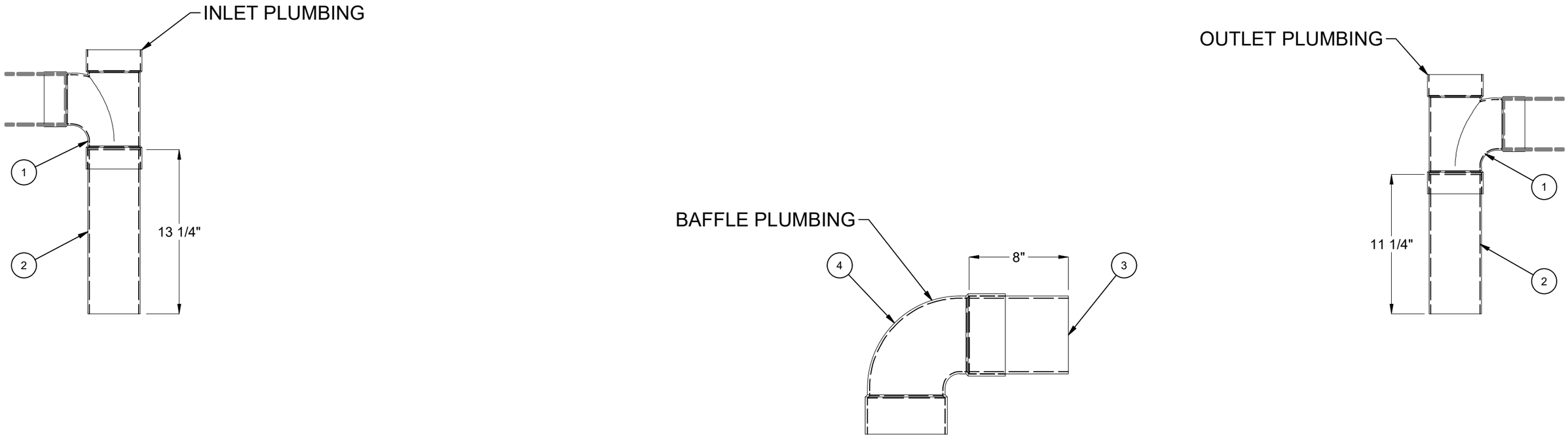


ELEVATION VIEW

| | | | |
|---|---|---|---|
| BURY DEPTH: | to | | |
| WATER LEVEL: | APPROX. WEIGHT: | 7.61 Lbs | |
| DESIGN SPEC: | LOADING SPEC: | | |
| AGENCY: | AGENCY SPEC: | | |

JENSEN PRECAST EST. 1968

WWW.JENSENPRECAST.COM

©2023 Jensen Precast- All rights reserved.
All materials appearing as Jensen Precast documents and the like are proprietary work product and are protected under U.S. copyright and other laws.
Unless in conjunction with business conducted with Jensen Precast, any use of Jensen Precast work product without express, written consent is prohibited, and recipient is prohibited from distributing any and all work product to non-approved third parties under penalty of civil action.

DESCRIPTION: 200025834 Plumbing - MU 2500 4 Inch Septic 24"E, 24"E MH Access Single Baffle DB

PLUMBING LAYOUT

REV: C-2

| | | | |
|---|---|---|---|
| PART NUMBER: | 200049942 | DRAWN BY: | C.Flores |
| CREATED: | 2/23/2021 | MODIFIED: | 6/30/2023 |

SHEET: 1 OF 1