DESIGN NOTES
■ DESIGNED PER CALCS. #34900
■ ALL PARTS TO BE STENCILED: MFG DATE / PRODUCT ID / WEIGHT.
■ "GRD" STENCILED IN RED LETTERS (1 1/2" MIN. - 2" MAX.)

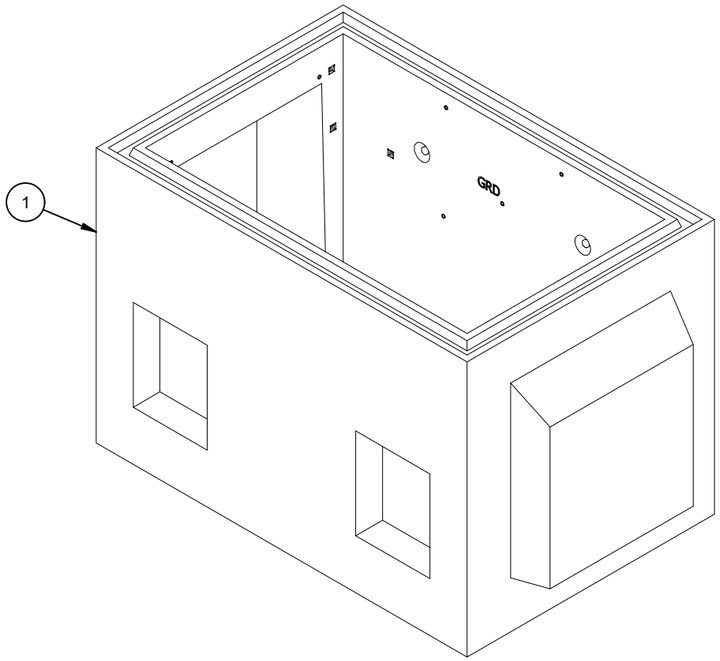

ISOMETRIC VIEW

BILL OF MATERIALS

ITEM	UNIT QTY	QTY	PART NUMBER	DESCRIPTION
1	72.619 ft^3	72.619 ft^3	100006029	CONCRETE 5500 PSI SCC ED
2	1	4	100002877	ANCHOR DOGBONE P52 4T X 9-1/2" GALV
3	1	4	100002874	ANCHOR DOGBONE P52 4T X 4-3/4" GALV
4	1	2	100003026	PULL IRON OFFSET .875DIA 6 IH X 10.875L X 6.75W GALV
5	1	4	100008245	Insert Thin Slab Coil 4-Leg 1 x 5.5" Galv (F53 or Equiv.)
6	1	4	100008247	INSERT COIL THIN SLAB DOUBLE 4LEG 1 X 5 GALV CX-48
7	1	12	100012720	INSERT PLASTIC W/ BREAK OFF SNAP 0.5IN
8	1	2	100005932	INSERT GROUND BRONZE BOTTLE ROCKET 1/2-13 UNC WITH 11IN COPPER ROD 12H69
9	1	2	100044184	GROUND CLAMP W/4SS BOLTS RBC-04SS KBR
10	1	4	100002765	Insert Ferrule Loop 0.5 x 2.75" Zinc (F42 or Equiv.)
11	1	1	300127216	REINFORCING MAT 300127216

200049826.idw

LIFTING NOTES
■ INSTALLATION: THIS CONCRETE PRODUCT IS DESIGNED TO BE LIFTED AT 5500 PSI WITH 4 LIFT CONNECTIONS EQUALLY LOADED TO 4 LIFTING POINTS AT A MINIMUM 60° SLING ANGLE, MEASURED FROM HORIZONTAL.
■ DEMOLDING: THIS CONCRETE PRODUCT IS DESIGNED TO BE LIFTED AT 2500 PSI WITH 4 LIFT CONNECTIONS EQUALLY LOADED TO 4 LIFTING POINTS AT A MINIMUM 60° SLING ANGLE, MEASURED FROM HORIZONTAL.
*All rigging shall be design by a qualified professional. Loading diagrams show illustrations of possible rigging setups to achieve the required sling angle and load leg equalization. Other valid rigging configurations are possible. A qualified professional must be consulted prior to lifting.

RIGGING DIAGRAMS*

INSTALLATION	C	DEMOLDING	C

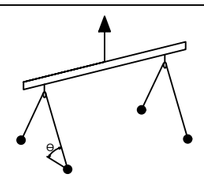

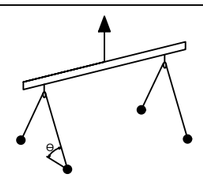

BURY DEPTH:	0.8' - 8.5' to Top		
WATER LEVEL:	3.0'	APPROX. WEIGHT:	10939.65 Lbs
DESIGN SPEC:	ACI 318,ASTM C857	LOADING SPEC:	A-16 (AASHTO HS20-44)
REINFORCEMENT TYPE:	Rebar	LIFTING TYPE:	Dogbone

Infrastructure
JENSEN
WWW.JENSENPRECAST.COM

©2025 Jensen Infrastructure - All rights reserved.
All materials appearing as Jensen Infrastructure documents and the like are proprietary work product and are protected under U.S. copyright and other laws.
Unless in conjunction with business conducted with Jensen Infrastructure , any use of Jensen Infrastructure work product without express, written consent is prohibited, and recipient is prohibited from distributing any and all work product to non-approved third parties under penalty of civil action. This product shall only be produced in a Jensen Infrastructure facility.

REVISION HISTORY

REV	DESCRIPTION	DATE	APPROVED
C-1	REVISED PER MODIFIED FORM	7/25/2025	

DESCRIPTION:	Vault 4878x54 Rect. Bottom Section Ducted,Sump Edison HP 228, PB-8 CASTING LAYOUT	REV:	C-1
PART NUMBER:	200049826	DRAWN BY:	J. Prado
CREATED:	3/8/2021	MODIFIED:	7/25/2025
		SHEET:	1 OF 2

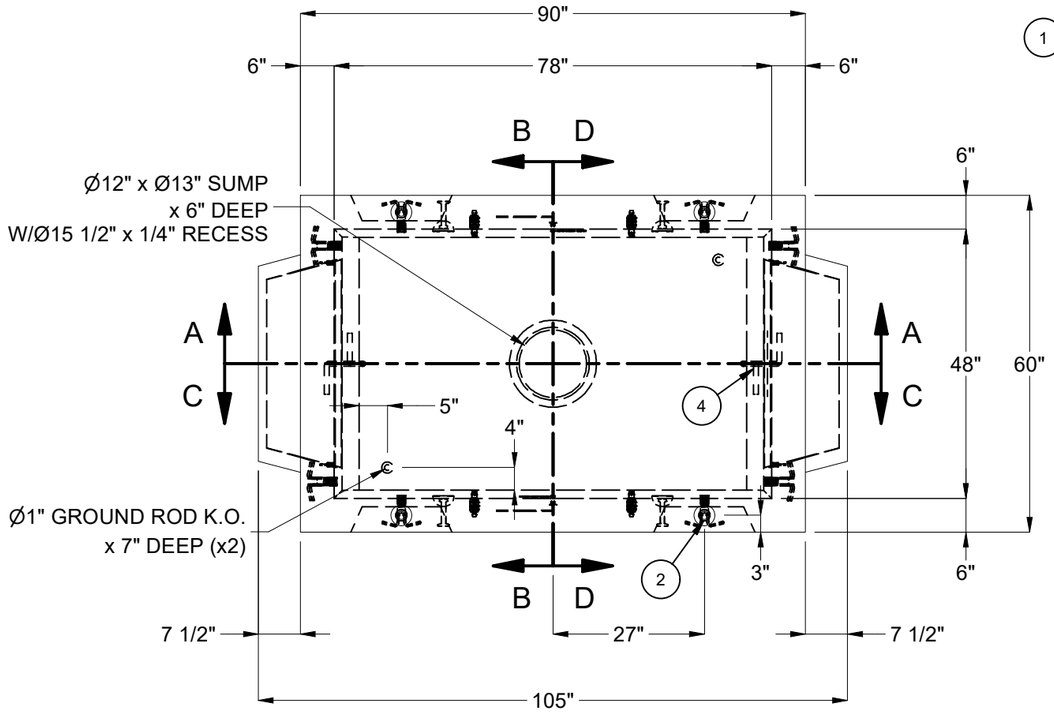

PLAN VIEW

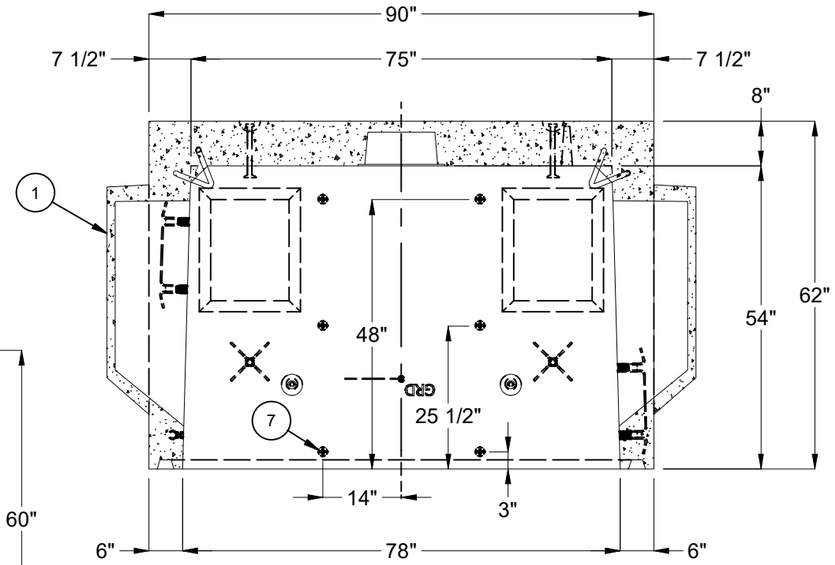

SECTION A-A

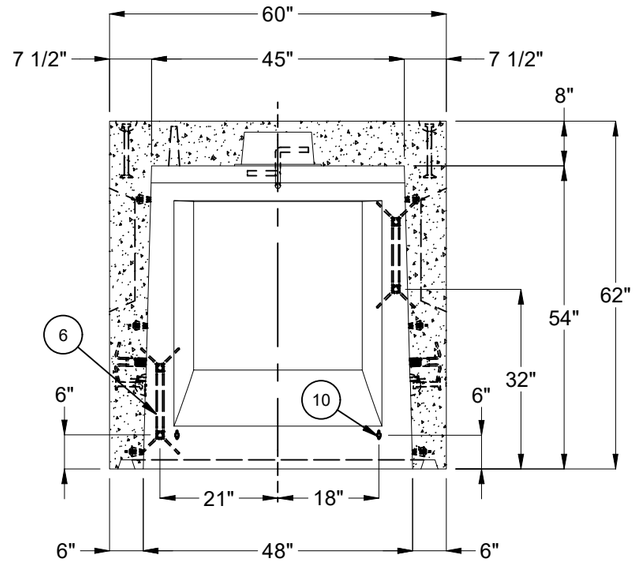

SECTION B-B

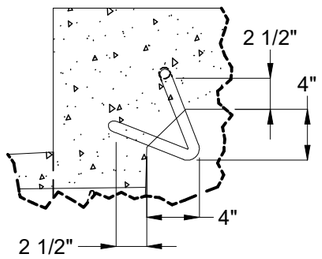

DETAIL E

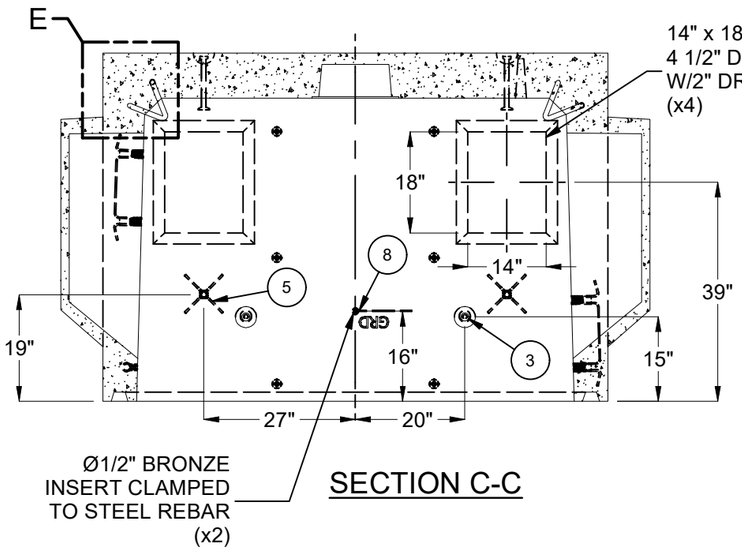

SECTION C-C

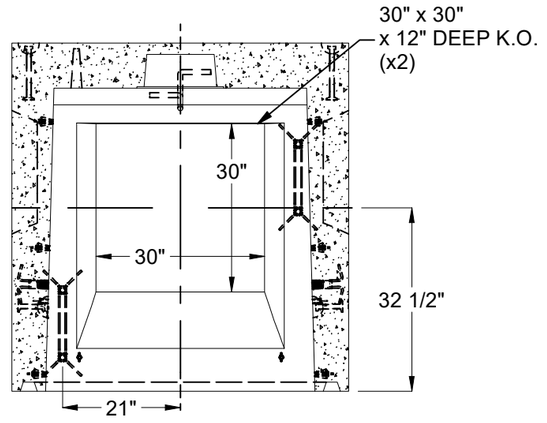

SECTION D-D

BURY DEPTH:	0.8' - 8.5' to Top		
WATER LEVEL:	3.0'	APPROX. WEIGHT:	10939.65 Lbs
DESIGN SPEC:	ACI 318,ASTM C857	LOADING SPEC:	A-16 (AASHTO HS20-44)
REINFORCEMENT TYPE:	Rebar	LIFTING TYPE:	Dogbone

Infrastructure
JENSEN
WWW.JENSENPRECAST.COM

©2025 Jensen Infrastructure - All rights reserved.
All materials appearing as Jensen Infrastructure documents and the like are proprietary work product and are protected under U.S. copyright and other laws.
Unless in conjunction with business conducted with Jensen Infrastructure , any use of Jensen Infrastructure work product without express, written consent is prohibited, and recipient is prohibited from distributing any and all work product to non-approved third parties under penalty of civil action. This product shall only be produced in a Jensen Infrastructure facility.

DESCRIPTION:	Vault 4878x54 Rect. Bottom Section Ducted,Sump Edison HP 228, PB-8 CASTING LAYOUT		REV: C-1
PART NUMBER:	200049826	DRAWN BY:	J. Prado
CREATED:	3/8/2021	MODIFIED:	7/25/2025
			SHEET: 2 OF 2

200049826.idw