NOTES
■ MINIMUM EXCAVATION SIZE: 10'-6" X 6'-6" DEPTH REQ'D.
■ LOAD CONDITION 1: H-20 TRAFFIC WITH DRY SOIL CONDITIONS (WATER LEVEL BELOW TANK) AND 13 INCHES TO 14 FEET OF SOIL COVER.
■ LOAD CONDITION 2: H-20 TRAFFIC WITH WATER LEVEL 2 FEET BELOW GRADE AND 13 INCHES TO 9 FEET OF SOIL COVER
■ PROPERTIES SHOWN ARE FOR LOAD CONDITION 1.
■ FOR COMPLETE DESIGN AND PRODUCT INFORMATION CONTACT JENSEN PRECAST.

BILL OF MATERIALS

ITEM	QTY	PART NUMBER	DESCRIPTION
1	1	200019291	Tank MU 1500 Gallon Rect. Bottom Section HGW
2	1	200017134	Vertical Slab Baffle MU 1500
3	1	200023927	Tank MU 500-1500 Gallon x 10 Slab Top 24"E, 24"E DB
4	3.000 ul	100013648	SEALANT JOINT BUTYL RUBBER ASTM C-990 AND M198 CS-102 1IN EQUIV X14.5FT PER ROLL

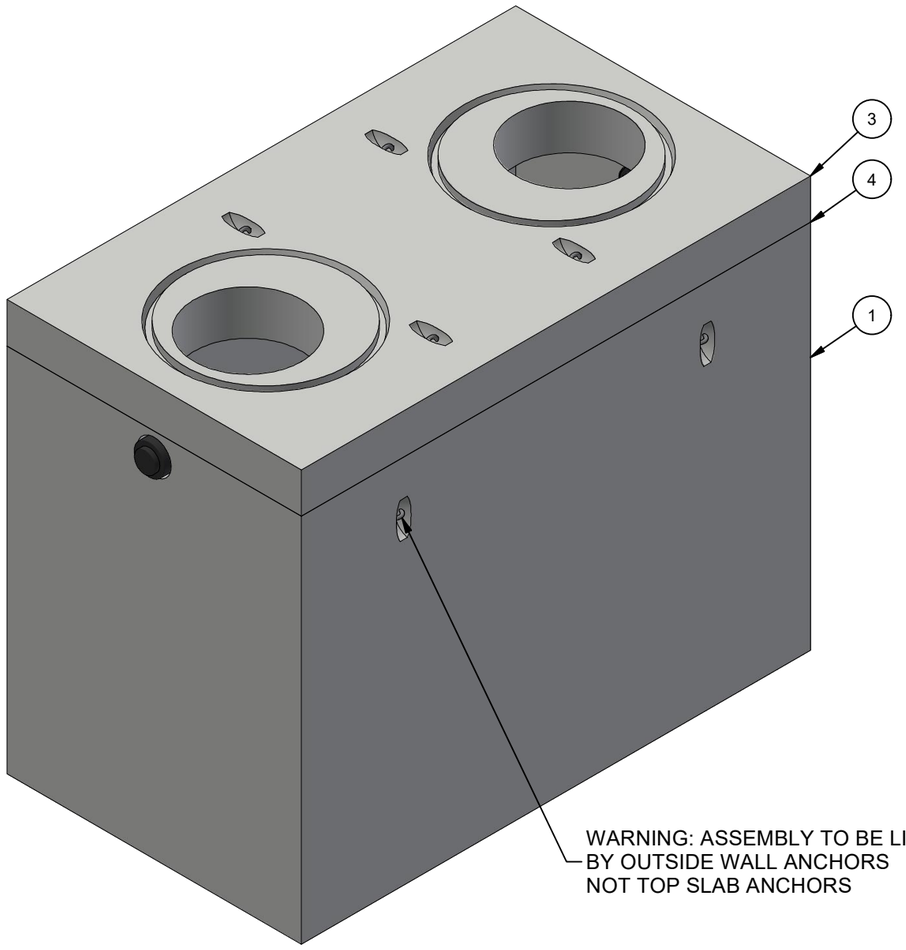

ISO LAYOUT

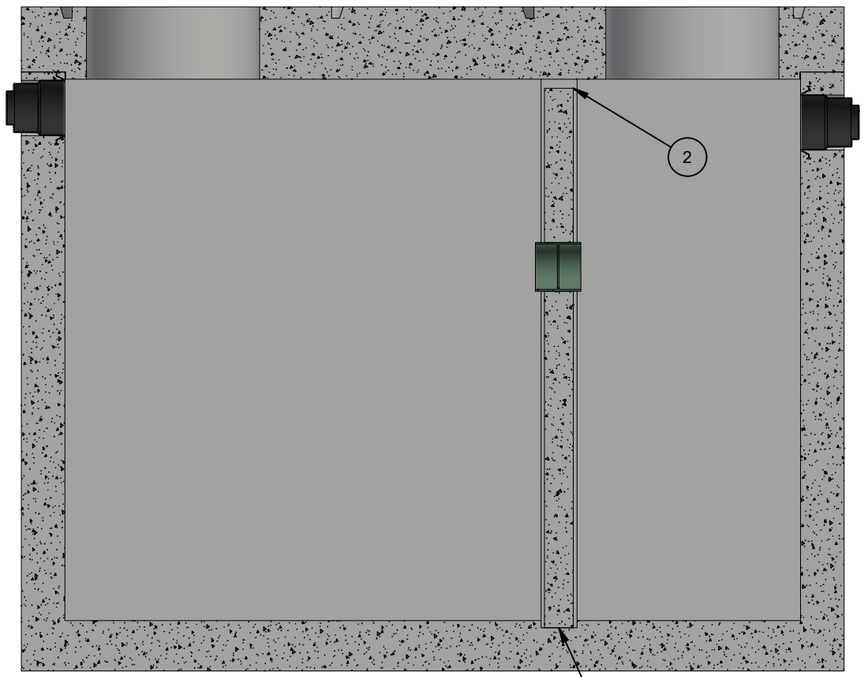

SECTION

LIFTING NOTES
■ THIS CONCRETE PRODUCT IS DESIGNED TO BE LIFTED AT 2500 PSI WITH 4 LIFT CONNECTIONS EQUALLY LOADED TO 2 LIFTING POINTS AT A MINIMUM 60° SLING ANGLE, MEASURED FROM HORIZONTAL.

BURY DEPTH:	1.1' - 14.0' to Top		
WATER LEVEL:	Below Structure	APPROX. WEIGHT:	24701.81 Lbs
DESIGN SPEC:	ACI 318,ASTM C890	LOADING SPEC:	A-16 (AASHTO HS20-44)
REINFORCEMENT TYPE:		LIFTING TYPE:	A-Anchor

JENSEN PRECAST EST. 1968

WWW.JENSENPRECAST.COM

©2023 Jensen Precast- All rights reserved.
All materials appearing as Jensen Precast documents and the like are proprietary work product and are protected under U.S. copyright and other laws.
Unless in conjunction with business conducted with Jensen Precast, any use of Jensen Precast work product without express, written consent is prohibited, and recipient is prohibited from distributing any and all work product to non-approved third parties under penalty of civil action.

CHANGE HISTORY			
REV	DESCRIPTION	DATE	BY
A	DRAWING CREATED	3/5/2021	T.Larson
B	DESCRIPTION/ PROPERTY UPDATES	5/11/2023	CF

DESCRIPTION:
Tank MU 1500 Gallon 6 Inch Assembly 24"E, 24"E MH Access Single Baffle DB
CASTING LAYOUT

REV: C-3

PART NUMBER:	200049808	DRAWN BY:	T.Larson
CREATED:	2/1/2021	MODIFIED:	4/27/2023

SHEET: 1 OF 1

200049808.idw