BILL OF MATERIALS

ITEM	QTY	PART NUMBER	DESCRIPTION
1	2	100002698	PIPE FITTING PVC SDR35 SAN TEE 6DIA
2	40.000 in	100002511	PIPE PVC 6IN DIA SDR35 ASTM D-3034 SOLVENT WELD SEWER DRAIN
3	1	100002710	FITTING PVC SDR35 6IN DIA 90 DEG ELBOW ASTM D-3034 SOLVENT WELD SEWER DRAIN

200049727.idw

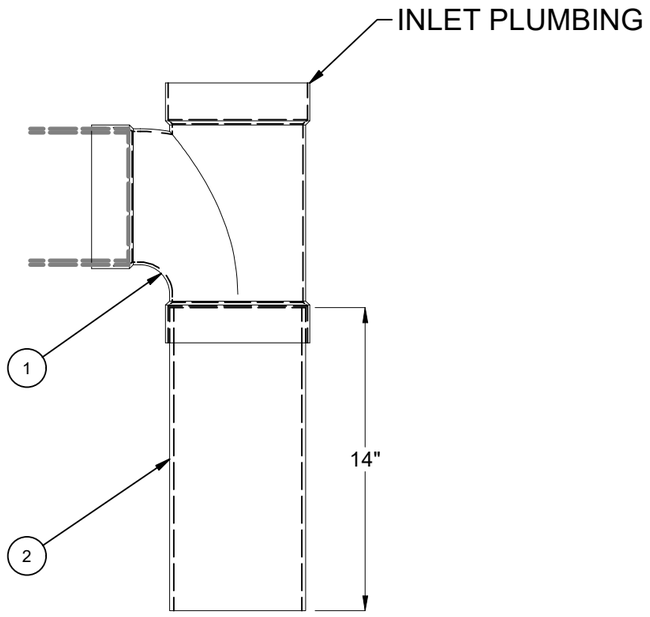

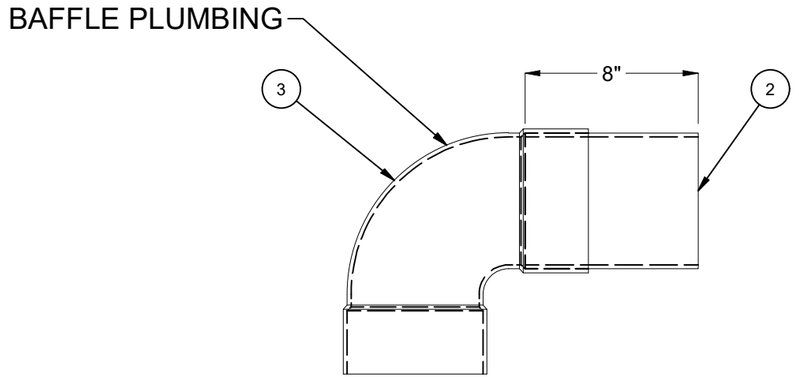

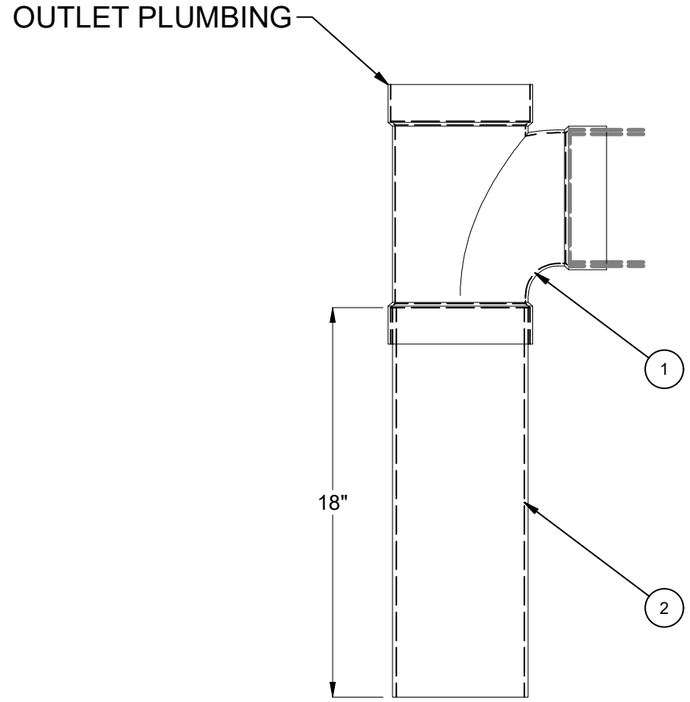

ELEVATION VIEW

BURY DEPTH:	to	JENSEN PRECAST EST. 1968 WWW.JENSENPRECAST.COM	©2023 Jensen Precast- All rights reserved. All materials appearing as Jensen Precast documents and the like are proprietary work product and are protected under U.S. copyright and other laws. Unless in conjunction with business conducted with Jensen Precast, any use of Jensen Precast work product without express, written consent is prohibited, and recipient is prohibited from distributing any and all work product to non-approved third parties under penalty of civil action.	DESCRIPTION: 200033834 Plumbing - MU 750 Gallon 6 Inch Gravity Grease Interceptor 24"E, 24"E MH Access Single Baffle DB PLUMBING LAYOUT	REV: B-1
WATER LEVEL:	APPROX. WEIGHT: 9.17 Lbs				
DESIGN SPEC:	LOADING SPEC:			PART NUMBER: 200049727 / DRAWN BY: E. Fine	SHEET: 1 OF 1
AGENCY:	AGENCY SPEC:			CREATED: 2/16/2021 / MODIFIED: 5/12/2023	