NOTES

- FOR COMPLETE DESIGN AND PRODUCT INFORMATION CONTACT JENSEN PRECAST.

BILL OF MATERIALS

ITEM	UNIT QTY	QTY	PART NUMBER	DESCRIPTION
1	1	1	100002265	CAP 1222 J16 PLASTIC
2	0.813 ft^3	0.813 ft^3	100011426	CONCRETE MIX GENERIC 5500 PSI
3	1	2	100008416	LIFT TUBE N16 PLASTIC
4	1	2	100007132	SQUARE NUT 3/8-16 ALUM 18-8

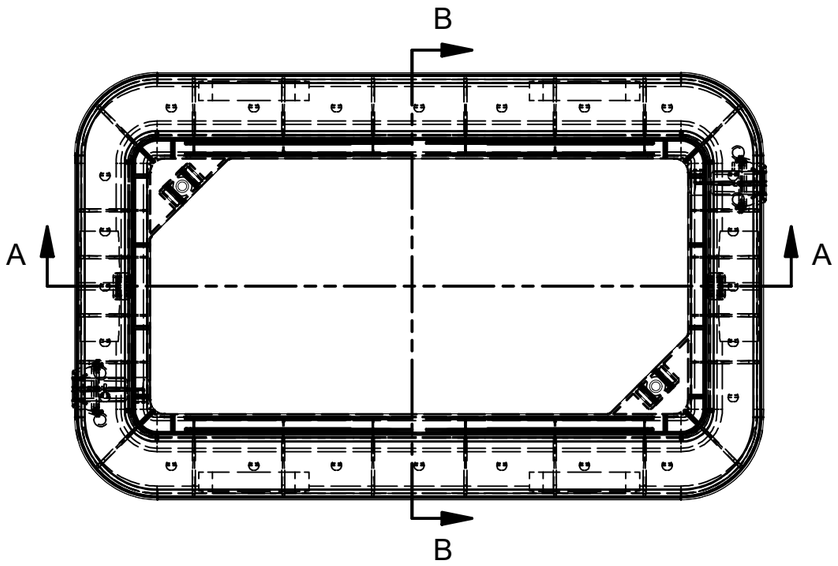

TOP VIEW

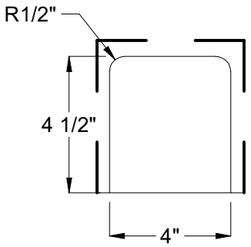

DETAIL A-1

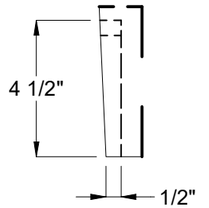

DETAIL A-2

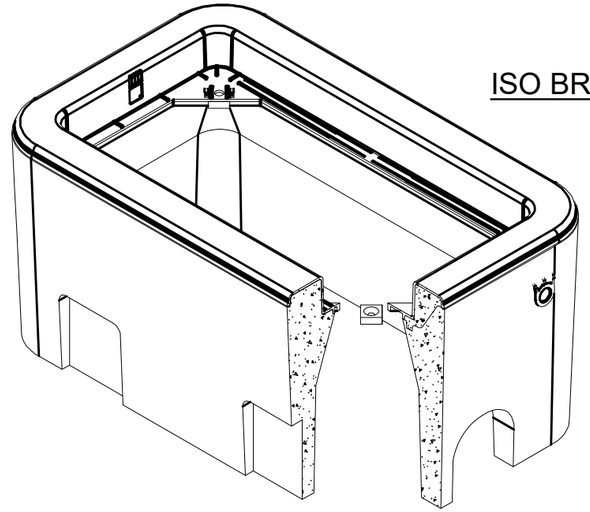

ISO BREAKOUT VIEW

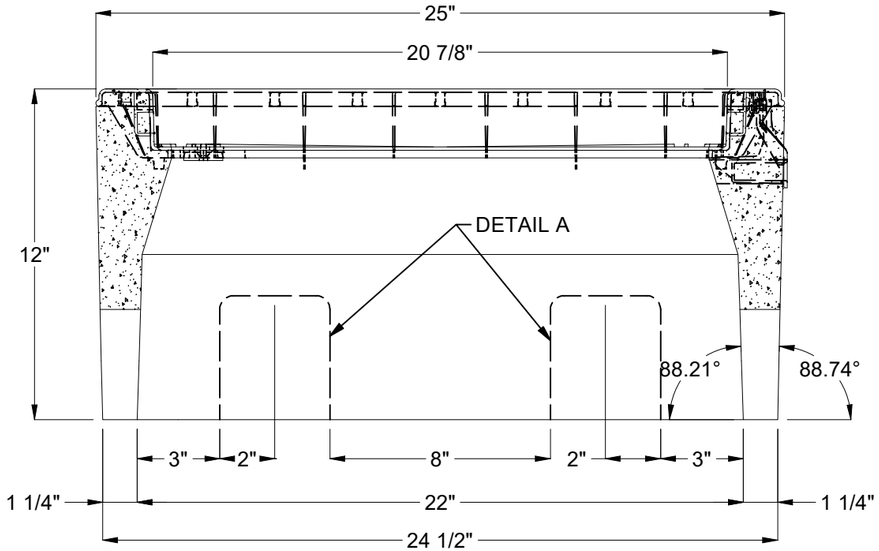

SECTION A-A

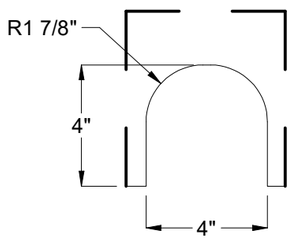

DETAIL B-1
THROUGH BLOCKOUT

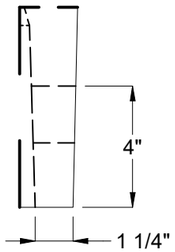

DETAIL B-2

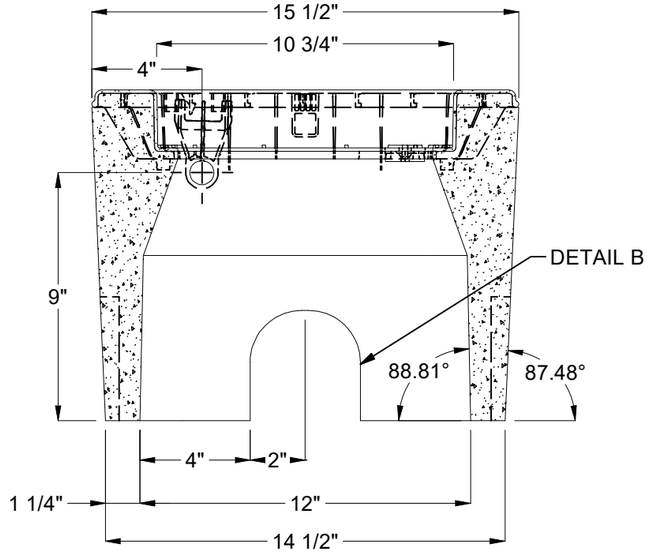

SECTION B-B

CHANGE HISTORY

NO.	DESCRIPTION	DATE	BY
1	INITIAL RELEASE 2102-50442	3/10/2021	BGD

BURY DEPTH:	0.0' - 0.5' to Top		
WATER LEVEL:	Below Structure	APPROX. WEIGHT:	124.3 Lbs
DESIGN SPEC:	ASTM C857	LOADING SPEC:	A-03 (300 psf)
REINFORCEMENT TYPE:	None	LIFTING TYPE:	None

JENSEN PRECAST EST. 1968

WWW.JENSENPRECAST.COM

©2024 Jensen Precast- All rights reserved.
All materials appearing as Jensen Precast documents and the like are proprietary work product and are protected under U.S. copyright and other laws.
Unless in conjunction with business conducted with Jensen Precast, any use of Jensen Precast work product without express, written consent is prohibited, and recipient is prohibited from distributing any and all work product to non-approved third parties under penalty of civil action.

DESCRIPTION:	HN 1222x12 Concrete Box 3/8-16 Alum Nut Mousehole CASTING LAYOUT		REV: A-4
PART NUMBER:	200049350	DRAWN BY:	B. Gentry-Dunn
CREATED:	2/22/2021	MODIFIED:	2/21/2024
			SHEET: 1 OF 1

200049350.idw