NOTES
■ FOR COMPLETE DESIGN AND PRODUCT INFORMATION CONTACT JENSEN PRECAST.

BILL OF MATERIALS

ITEM	UNIT QTY	QTY	PART NUMBER	DESCRIPTION
1	53.783 ft^3	53.783 ft^3	100002728	CONCRETE MIX GENERIC 4000 PSI
2	1	1	200047930	REINFORCING MAT 200047930 OUTSIDE MAT
3	1	1	200047929	REINFORCING MAT 200047929 INSIDE MAT

WEIGHT/L.F	D-LOAD CLASS	INSIDE CAGE OUTSIDE DIAMETER OF CIRCUMFERENTIAL WIRE	MIN. WELDED SPLICE*	OUTSIDE CAGE OUTSIDE DIAMETER OF CIRCUMFERENTIAL WIRE	MIN. WELDED SPLICE*
1,010 LBS	1350-III	WWF 2"x8" - W7.0xW3.0	2.0"	WWF 2"x8" - W7.0xW3.0	2.0"
		40.00" x 62.00" DIAMETER		47.00"x 69.00" DIAMETER	
AREA OF STEEL PROVIDED		0.42 SQ. IN PER FOOT		0.42 SQ. IN PER FOOT	
AREA OF STEEL REQUIRED		0.39 SQ. IN PER FOOT		0.39 SQ. IN PER FOOT	
*NON-WELDED SPLICES ARE 40 TIMES CIRCUMFERENTIAL BAR DIAMETER					

200047931.idw

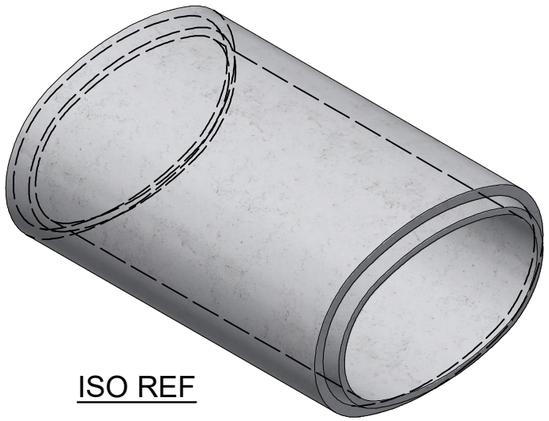

ISO REF

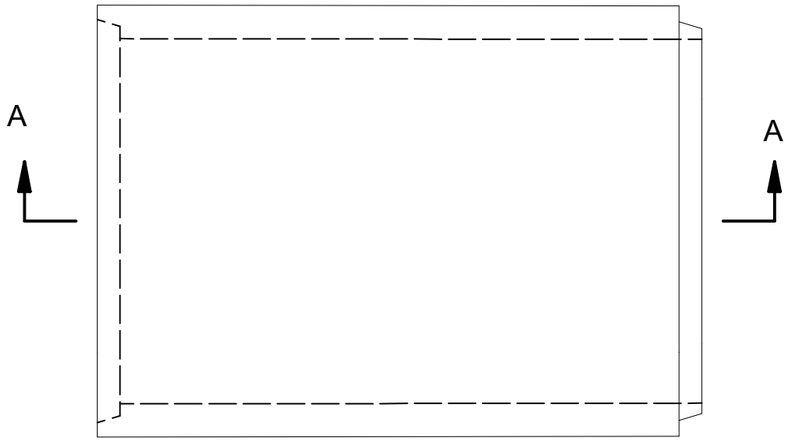

PLAN VIEW

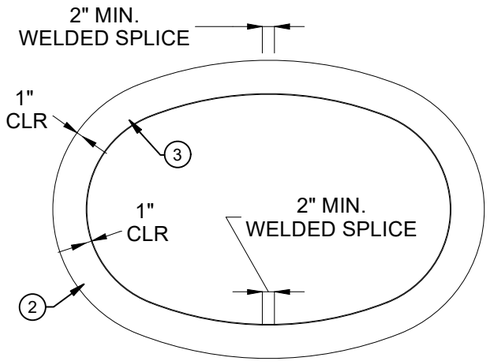

CROSS SECTION

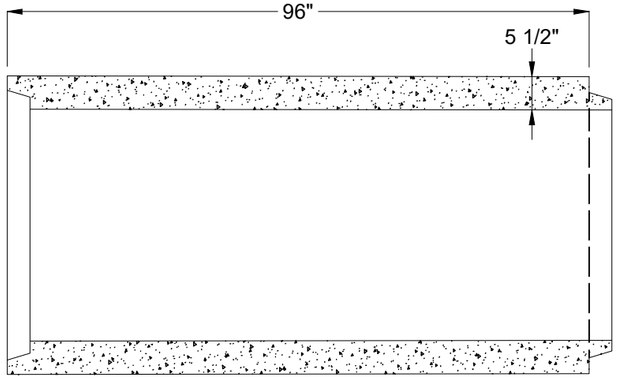

SECTION A-A

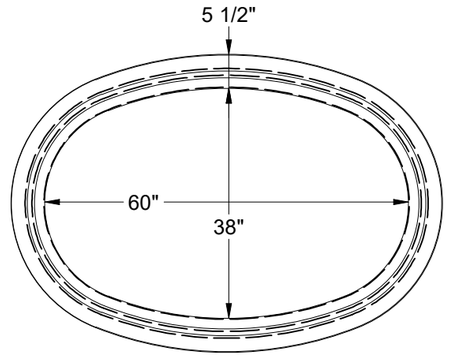

END VIEW

CHANGE HISTORY			
NO.	DESCRIPTION	DATE	BY
1	INITIAL RELEASE 2101-50222	1/18/21	DCH
2	REINFORCING CAGE UPDATE	1/19/21	DCH

BURY DEPTH:	to		
WATER LEVEL:	Agency Specified	APPROX. WEIGHT:	8082.75 Lbs
DESIGN SPEC:	ASTM C507	LOADING SPEC:	Class 3
REINFORCEMENT TYPE:	WWR Plain	LIFTING TYPE:	None

JENSEN PRECAST EST. 1968

WWW.JENSENPRECAST.COM

©2021 Jensen Precast- All rights reserved.
All materials appearing as Jensen Precast documents and the like are proprietary work product and are protected under U.S. copyright and other laws.
Unless in conjunction with business conducted with Jensen Precast, any use of Jensen Precast work product without express, written consent is prohibited, and recipient is prohibited from distributing any and all work product to non-approved third parties under penalty of civil action.

DESCRIPTION:	RCP PE3860 Horizontal Class 3 Bell - Spigot 96L CASTING LAYOUT		REV: B-1
PART NUMBER:	200047931	DRAWN BY:	D. Hughes
CREATED:	1/12/2021	MODIFIED:	1/19/2021
			SHEET: 1 OF 1