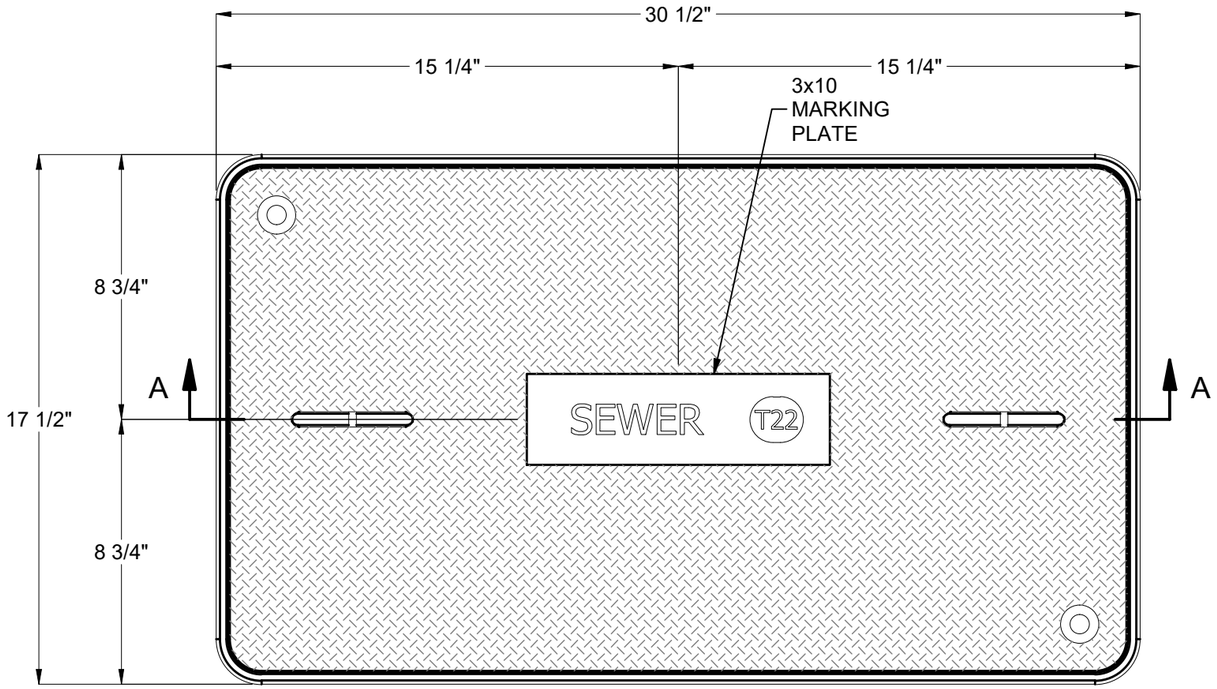

BILL OF MATERIALS

ITEM	UNIT QTY	QTY	PART NUMBER	DESCRIPTION
1	0.587 ft^3	0.587 ft^3	100035039	CONCRETE COMPOSITE LID MIX BRUCE
2	0.847 lbmass	1.694 lbmass	100008157	Combo Mat Fiber Reinforcing 24 Oz
3	0.500 ft	1.000 ft	100008155	REINF ROD SMOOTH PENCIL #2 1/4 SS

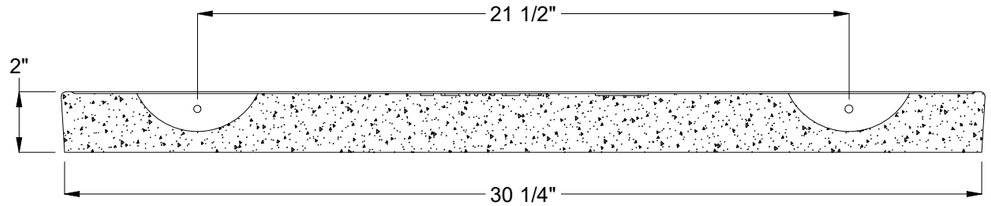

SECTION A-A

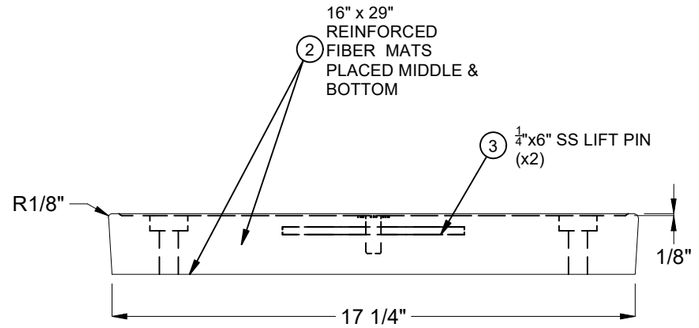

200047856.idw

REVISION HISTORY

REV	DESCRIPTION	DATE	BY
A	INITIAL RELEASE	1/13/2021	BGD

PALLET QUANTITY:	40	APPROX. WEIGHT:	71.83 lbs
CERTIFICATION:	A2LA	DESIGN/TEST LOAD:	22.5/33.75 kip
DESIGN SPEC:	ANSI/SCTE-77 & WUC 3.6	LOADING SPEC:	TIER-22
AGENCY:	N/A	AGENCY SPEC:	N/A

JENSEN COMPOSITES

WWW.JENSENPRECAST.COM

©2018 Jensen Precast- All rights reserved.
All materials appearing as Jensen Precast documents and the like are proprietary work product and are protected under U.S. copyright and other laws.
Unless in conjunction with business conducted with Jensen Precast, any use of Jensen Precast work product without express, written consent is prohibited, and recipient is prohibited from distributing any and all work product to non-approved third parties under penalty of civil action.

DESCRIPTION: HPC 1730-2 Bolt Down TIER-22 Solid Polymer Concrete Handhole Cover SEWER

REV: A-2

PART #:	200047856	DRAWN BY:	B. Gentry-Dunn
CREATED:	2/19/2019	MODIFIED:	1/13/2021

SHEET: 1 OF 1