DESIGN NOTES
■ CONCRETE DESIGNED IN ACCORDANCE WITH AASHTO H20-44 TRAFFIC BRIDGE LOADING USING 5,500 PSI COMPRESSIVE STRENGTH CONCRETE AND 60,000 PSI YIELD STRENGTH ASTM A-706 STEEL REINFORCEMENT PER CALCS. #34592
■ MINIMUM EXCAVATION SIZE: 4'-8" X 3'-8" DEPTH REQ'D.
■ FOR COMPLETE DESIGN AND PRODUCT INFORMATION CONTACT JENSEN PRECAST.
■ COVER DESIGN FOR PARKWAY LOADING.
■ VAULT TO BE PLACED ON A MIN. 6" BASE OF CRUSHER RUN FOR EASE OF INSTALLATION AND EVEN LOAD DISTRIBUTION.
■ ALL PARTS TO BE STENCILED: MFG DATE / JOB NUMBER / PRODUCT ID / WEIGHT.

BILL OF MATERIALS

ITEM	UNIT QTY	QTY	PART NUMBER	DESCRIPTION	MASS (lb)
5	1	1	200047601	Pull Box 2436 X 4 Slab Bottom Sump	551
1	1	1	100012648	Riser 2436x18 Rect. Riser Knockout CITY OF AZUSA	676
2	1	1	100012127	Top Riser 2436x6 Cast-In Frame	287
3	1	1	100006618	DAS1-SD-2436-D2-DP-G-FONT-(SC2436-PGV)	96
4	1	1	100007295	NAME PLATE 3X7-1/2 SS - AZUSA HIGH VOLTAGE	
8	1	4	100008105	PENTA BOLT 1/2-13 UNC 2-1/2 304SS W/CAPWASH	
6	1	4	100002523	CABLE RACK 8 HOLE GALV TABS	
7	1.000 ul	1.000 ul	100005749	SEALANT JOINT BUTYL RUBBER ASTM C-990 AND M198 CS-102 1IN EQUIV X14.5FT PER BOX 118FT	

200047599.idw

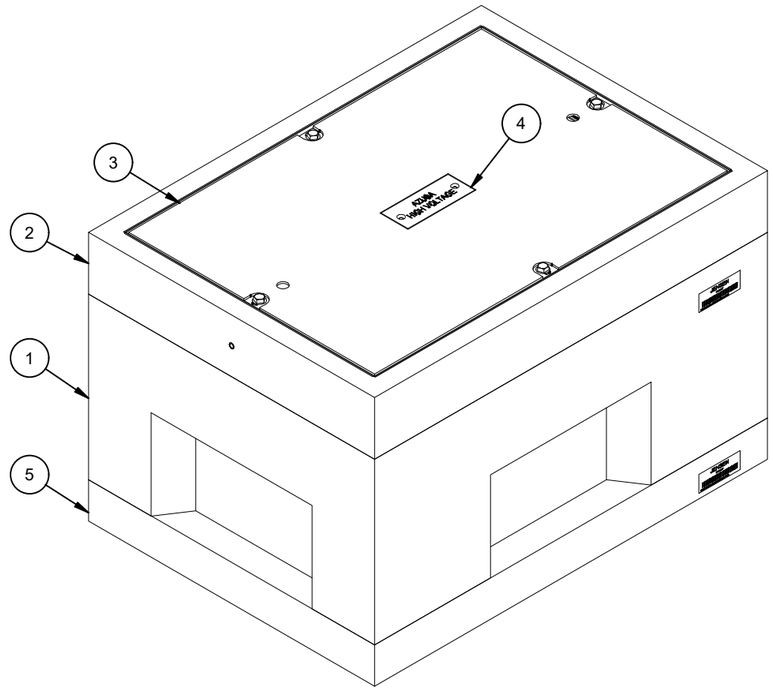

ISO VIEW

LIFTING NOTES
■ FIELD INSTALLATION: PLANT DEMOLDING: MINIMUM HANDLING CONCRETE STRENGTH F'c = 5500 PSI RIGGING EQUALIZER REQUIRED TO EQUALIZE LOAD TO 4 LIFTING POINTS WITH A SLING ANGLE BETWEEN 60° AND 90°

BURY DEPTH:	0' - 0' to Top		
WATER LEVEL:	3'	APPROX. WEIGHT:	1610.06 Lbs
DESIGN SPEC:	ASTM C857,ACI 318	LOADING SPEC:	A-16 (AASHTO HS20-44)
AGENCY:	CITY OF AZUSA	AGENCY SPEC:	

JENSEN PRECAST EST. 1968

WWW.JENSENPRECAST.COM

©2021 Jensen Precast- All rights reserved.
All materials appearing as Jensen Precast documents and the like are proprietary work product and are protected under U.S. copyright and other laws.
Unless in conjunction with business conducted with Jensen Precast, any use of Jensen Precast work product without express, written consent is prohibited, and recipient is prohibited from distributing any and all work product to non-approved third parties under penalty of civil action.

REVISION HISTORY			
REV	DESCRIPTION	DATE	APPROVED
B-1	INITIAL RELEASE	4/7/2021	

DESCRIPTION:	Pull Box 2436 Layout Assembly CITY OF AZUSA LAYOUT REVIEW		REV: B-1
PART NUMBER:	200047599	DRAWN BY: S. Rodarte	SHEET: 1 OF 2
CREATED:	1/7/2021	MODIFIED: 4/7/2021	

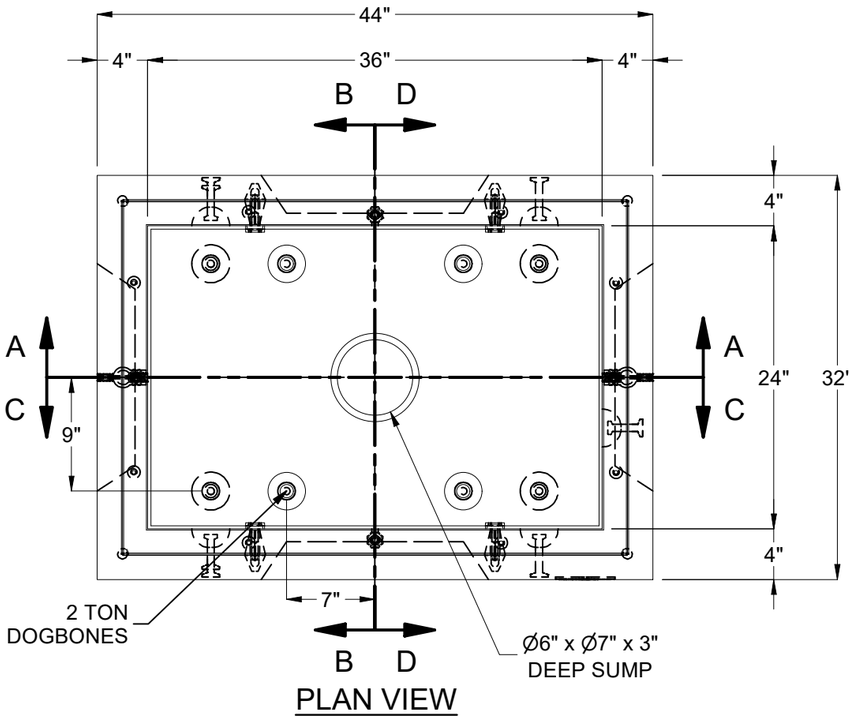

PLAN VIEW

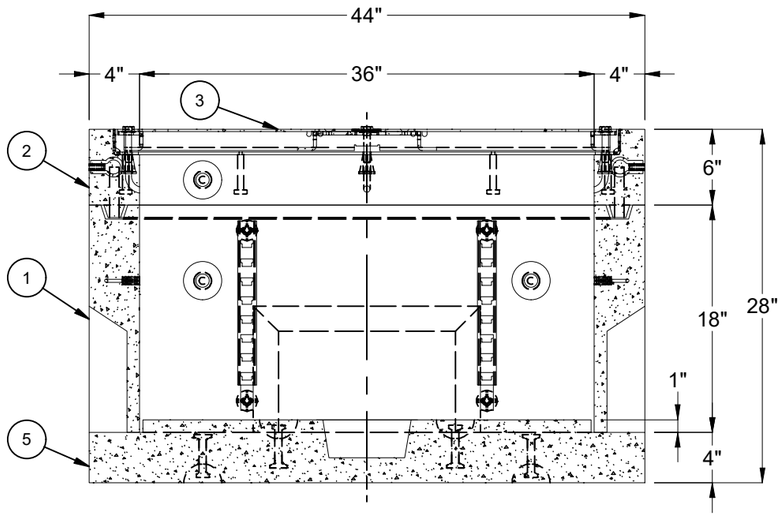

SECTION A-A

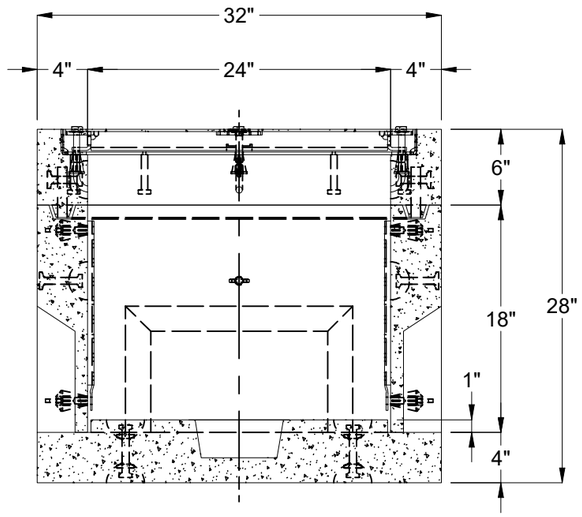

SECTION B-B

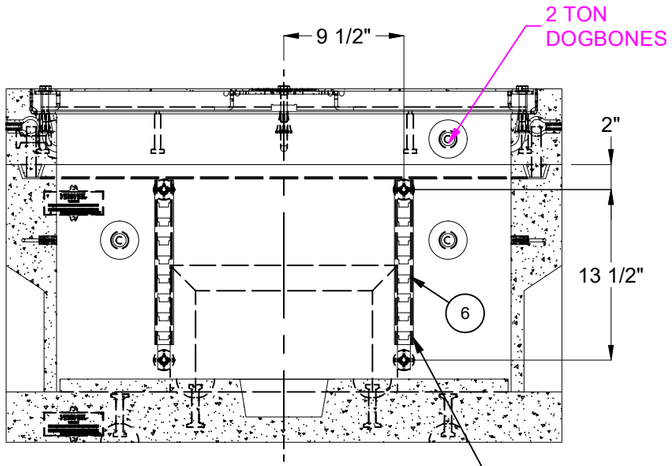

SECTION C-C

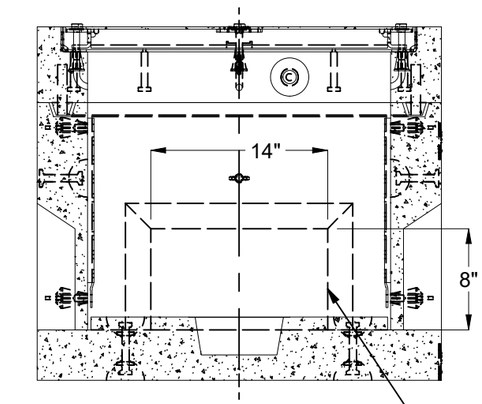

SECTION D-D

BURY DEPTH:	0' - 0' to Top		
WATER LEVEL:	3'	APPROX. WEIGHT:	1610.06 Lbs
DESIGN SPEC:	ASTM C857,ACI 318	LOADING SPEC:	A-16 (AASHTO HS20-44)
AGENCY:	CITY OF AZUSA	AGENCY SPEC:	

JENSEN PRECAST EST. 1968

WWW.JENSENPRECAST.COM

©2021 Jensen Precast- All rights reserved.
All materials appearing as Jensen Precast documents and the like are proprietary work product and are protected under U.S. copyright and other laws.
Unless in conjunction with business conducted with Jensen Precast, any use of Jensen Precast work product without express, written consent is prohibited, and recipient is prohibited from distributing any and all work product to non-approved third parties under penalty of civil action.

DESCRIPTION:	Pull Box 2436 Layout Assembly CITY OF AZUSA LAYOUT DRAWING		REV: B-1
PART NUMBER:	200047599	DRAWN BY:	S. Rodarte
CREATED:	1/7/2021	MODIFIED:	4/7/2021

SHEET: 2 OF 2

200047599.idw