BILL OF MATERIALS

ITEM	UNIT QTY	QTY	PART NUMBER	DESCRIPTION
1	1	1	200016623	Vault Neck 4848x12 LADWP COLA INSP
2	1	1	100012399	Plug Cover 4848x8 Slab Top 30"C LADWP 1-802 G-1B COLA INSP R-1581
3	1	4	100008123	PLUG VN CONCRETE SLAB PLASTIC

STOCKPILE - JENSEN INFRASTRUCTURE
CITY OF LOS ANGELES INSPECTION REQUIRED WO# C0034604

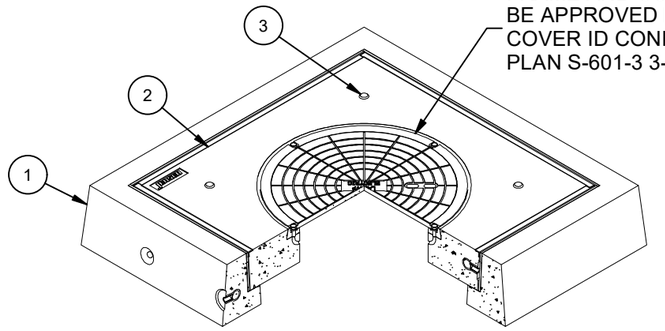

ISO VIEW

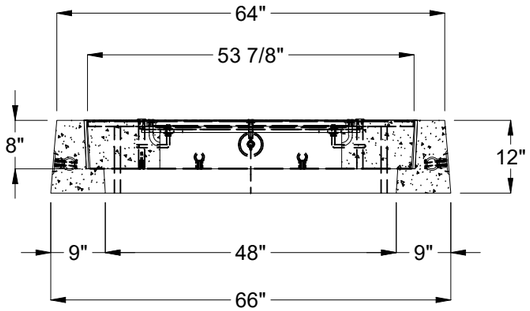

SECTION A-A

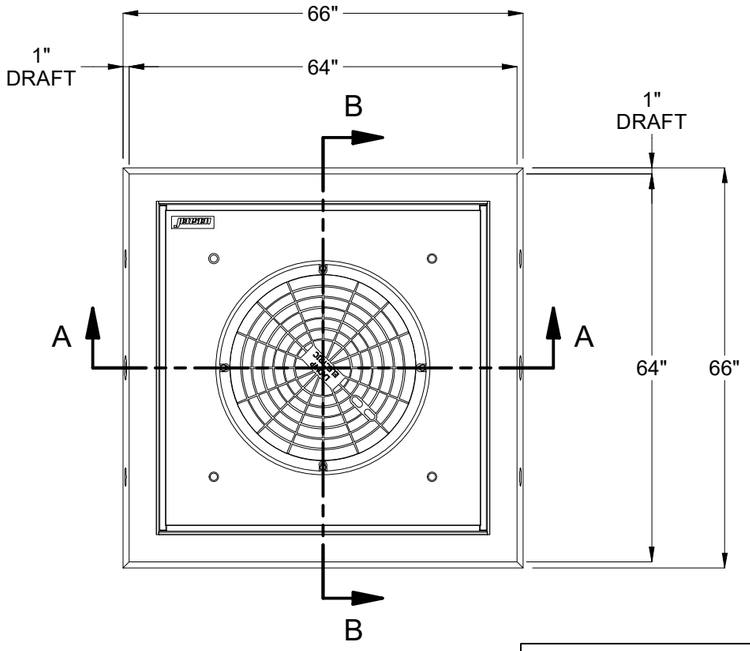

PLAN VIEW

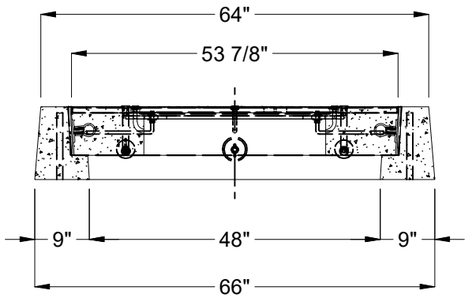

SECTION B-B

NOTES:

- STANDARDS. AASHTO LRFD BRIDGE DESIGN SPECIFICATIONS, 8TH EDITION, WITH 2022 CALTRANS AMENDMENTS, CITY OF LOS ANGELES BUREAU OF ENGINEERING STANDARD PLAN S-601-3, P178-R8 WHERE APPLICABLE, MANUAL PART H, ASTM C-857. STRUCTURAL CALCS. #33389.
- MATERIAL. CONCRETE, F'c=5,500 PSI. MIX TO INCLUDE FLY ASH AND DCI. REINFORCEMENT PER ASTM A-706, Fy=60,000.
- LOADS. VERTICAL LIVE LOAD: AASHTO HL-93, INCLUDING GREATER OF HS-20 TRUCK, TANDEM, OR PERMIT. LIVE LOAD SURCHARGE PER LA BOE PART H, FIGURE H 374.2A. SOIL LATERAL LOADS: 40 PCF (DRY), 81 PCF (SATURATED). SEE VAULT OR MANHOLE DRAWING FOR SOIL BEARING CAPACITY INFORMATION. DESIGN SOIL DENSITY IS 120 PCF.
- LOADS NOT INCLUDED. DESIGN DOES NOT INCLUDE COOPER E-80 RAILROAD LOADS OR LATERAL OR SURCHARGE LOADS THAT ARE PRODUCED BY FOOTING OR FOUNDATIONS ADJACENT TO THE STRUCTURE. THIS SUBSTRUCTURE SHALL BE KEPT AT LEAST IN A 1:1 RATIO AWAY FROM ALL FOOTINGS AND FOUNDATIONS, UNLESS THE ENGINEER OF RECORD APPROVES IN WRITING.
- INSTALLATION LIMITS OF CONCRETE EXTENSIONS IS 5'-0" DEEP.
- EACH CONCRETE SECTION SHALL BE MARKED ON THE INSIDE & OUTSIDE WITH "JENSEN", THE DESIGNATION "DWP/FA-CN" AND THE DATE OF THE POUR.
- "JENSEN", THE YEAR, AND THE DESIGNATION "FA-CN" SHALL BE CAST IN THE TOP OF THE NECK, THE SIDE OF THE COVER, AND ON THE INSIDE OF THE EXTENSIONS.
- EACH PIECE TO BE STENCILIED WITH ITS PART NO.
- BROOM FINISH ON COVER MUST HAVE AND MAINTAIN A MINIMUM OF 0.6 SLIP RESISTANCE AND/OR 0.35 SKID RESISTANCE PER S-601-3.
- EXTENSIONS MAY BE REUSED IF UNDAMAGED.
- ADDITIONAL SUBMITTAL, PERMIT AND CONSTRUCTION PLAN REVIEW WILL BE REQUIRED FOR EACH PROJECT LOCATION. SUBMIT TO CITY ENGINEER FOR APPROVAL PRIOR TO START OF ANY CONSTRUCTION.
- ALL INSTALLATIONS SHALL COMPLY WITH ALL OTHER LOCAL GOVERING CODES AND REGULATIONS INCLUDING CALIFORNIA PUBLIC UTILITIES COMMISSION REGULATIONS.
- INSTALLATION OF NECK AND EXTENSIONS PER LADWP 1-802.

BURY DEPTH:	to Top		
WATER LEVEL:	3.0'	APPROX. WEIGHT:	3392.34 Lbs
DESIGN SPEC:	AASHTO LRFD	LOADING SPEC:	AASHTO HL-93
AGENCY:	LADWP	AGENCY SPEC:	1-802 G-1B COLA INSP R-1581

Infrastructure
JENSEN
WWW.JENSENINFRASTRUCTURE.COM

©2026 Jensen Infrastructure - All rights reserved.
All materials appearing as Jensen Infrastructure documents and the like are proprietary work product and are protected under U.S. copyright and other laws.
Unless in conjunction with business conducted with Jensen Infrastructure, any use of Jensen Infrastructure work product without express, written consent is prohibited, and recipient is prohibited from distributing any and all work product to non-approved third parties under penalty of civil action.
This product shall only be produced in a Jensen Infrastructure facility.

REVISION HISTORY

REV	DESCRIPTION	DATE	APPROVED
F-1-2	UPDATED CONCRETE DESCRIPTION	5/26/2026	

DESCRIPTION: Vault Neck and Plug Cover Assembly 4848x12 30"C LADWP 1-802 G-1B COLA INSP R-1581

LAYOUT REVIEW

REV: F-1-3

PART NUMBER:	200047596	DRAWN BY:	J. Prado
CREATED:	1/6/2021	MODIFIED:	5/26/2026

SHEET: 1 OF 1

200047596.idw