NOTES
■ FOR COMPLETE DESIGN AND PRODUCT INFORMATION CONTACT JENSEN PRECAST.

BILL OF MATERIALS

ITEM	UNIT QTY	QTY	PART NUMBER	DESCRIPTION
1	10.675 ft^3	10.675 ft^3	100011425	CONCRETE MIX GENERIC 5000 PSI
2	1	1	200046923	REINFORCING MAT 200046923
3	1	3	100004878	ANCHOR UTILITY .671DIA 5-SLAB GALV P75 5UA671

200046922.idw

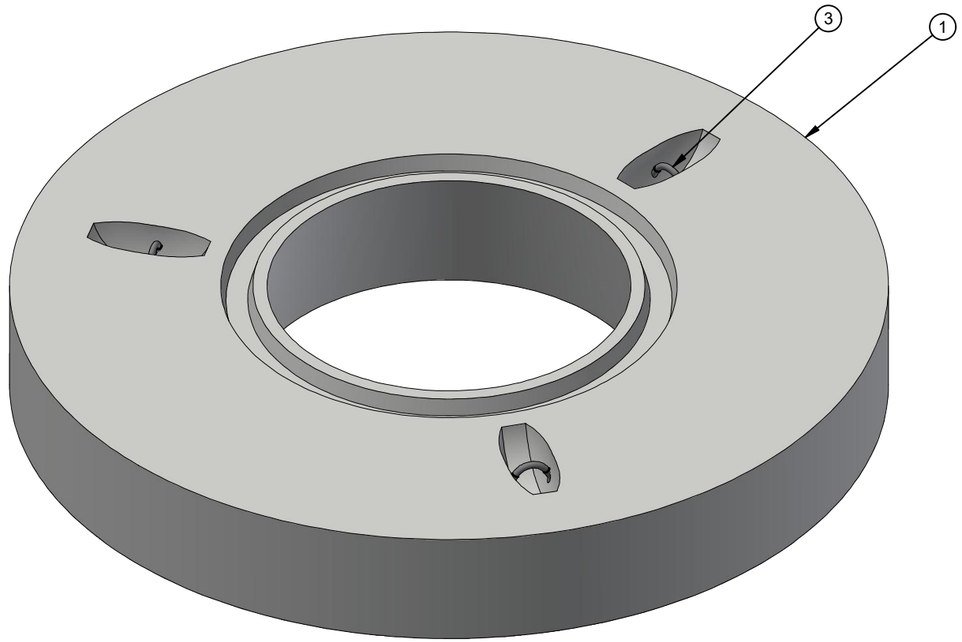

ISOMETRIC VIEW

LIFTING NOTES
■ THIS CONCRETE PRODUCT IS DESIGNED TO BE LIFTED AT 2500 PSI WITH 3 LIFT CONNECTIONS EQUALLY LOADED TO 3 LIFTING POINTS AT A MINIMUM 60° SLING ANGLE, MEASURED FROM HORIZONTAL.

BURY DEPTH:	0.0' - 10.0' to Top of Top Slab		
WATER LEVEL:	0.0'	WEIGHT:	1605.51 Lbs
DESIGN SPEC:	ASTM C890,ACI 318	LOADING SPEC:	A-16 (AASHTO HS20-44)
REINFORCEMENT TYPE:	Rebar	LIFTING TYPE:	A-Anchor

JENSEN PRECAST EST. 1968

WWW.JENSENPRECAST.COM

©2019 Jensen Precast- All rights reserved.
All materials appearing as Jensen Precast documents and the like are proprietary work product and are protected under U.S. copyright and other laws.
Unless in conjunction with business conducted with Jensen Precast, any use of Jensen Precast work product without express, written consent is prohibited, and recipient is prohibited from distributing any and all work product to non-approved third parties under penalty of civil action.

REVISION HISTORY

REV	DESCRIPTION	DATE	BY
A	INITIAL RELEASE 2012-50115	12/7/2020	BGD

DESCRIPTION:	Manhole D4858x8 Flat Top Flat 24 C CASTING LAYOUT		REV: A-1
PART NUMBER:	200046922	DRAWN BY: B. Gentry-Dunn	SHEET: 1 OF 2
CREATED:	6/12/2019	MODIFIED: 5/27/2021	

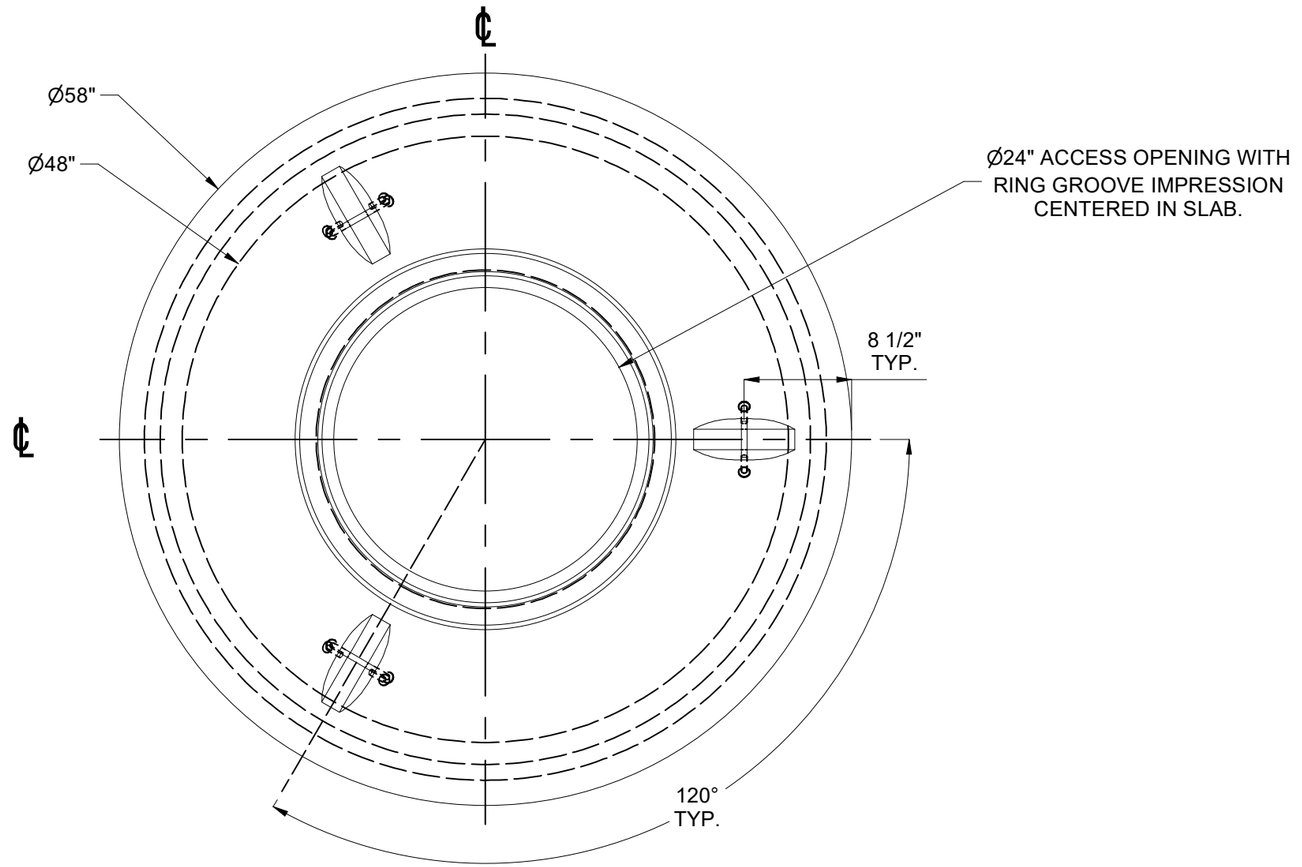

PLAN VIEW

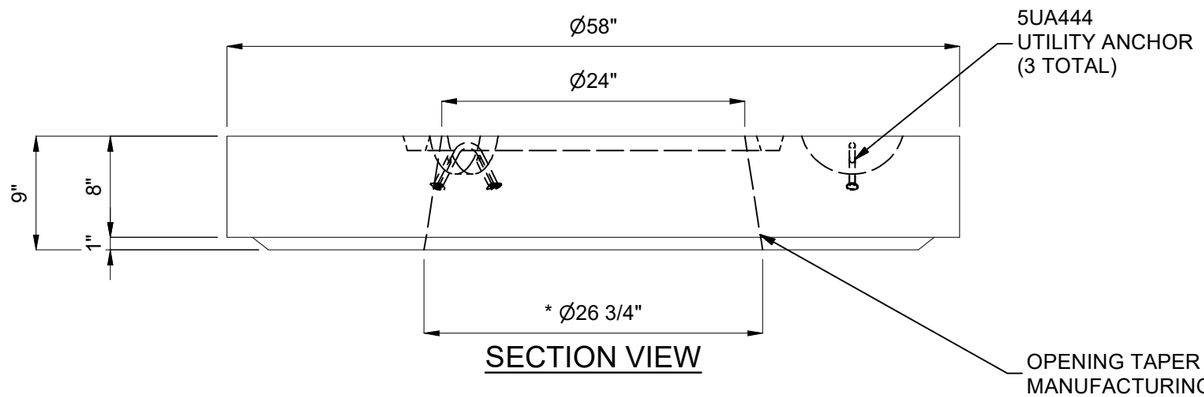

SECTION VIEW

BURY DEPTH:	0.0' - 10.0' to Top of Top Slab		
WATER LEVEL:	0.0'	WEIGHT:	1605.51 Lbs
DESIGN SPEC:	ASTM C890,ACI 318	LOADING SPEC:	A-16 (AASHTO HS20-44)
REINFORCEMENT TYPE:	Rebar	LIFTING TYPE:	A-Anchor

JENSEN PRECAST EST. 1968

WWW.JENSENPRECAST.COM

©2019 Jensen Precast- All rights reserved.
All materials appearing as Jensen Precast documents and the like are proprietary work product and are protected under U.S. copyright and other laws.
Unless in conjunction with business conducted with Jensen Precast, any use of Jensen Precast work product without express, written consent is prohibited, and recipient is prohibited from distributing any and all work product to non-approved third parties under penalty of civil action.

DESCRIPTION:	Manhole D4858x8 Flat Top Flat 24 C CASTING DRAWING		REV: A-1
PART NUMBER:	200046922	DRAWN BY:	B. Gentry-Dunn
CREATED:	6/12/2019	MODIFIED:	5/27/2021
			SHEET: 2 OF 2

200046922.idw