NOTES
■ FOR COMPLETE DESIGN AND PRODUCT INFORMATION CONTACT JENSEN PRECAST.

BILL OF MATERIALS

ITEM	UNIT QTY	QTY	PART NUMBER	DESCRIPTION	MASS (lbs)
1	17.701 ft^3	17.701 ft^3	100002728	CONCRETE MIX GENERIC 4000 PSI	2660.13
2	1	1	200046891	REINFORCING MAT 200046891	.01
3	1	4	100006138	INS FRL THNSLB FX-14 3/4 X 3-1/8 PLAIN	.97

200046892.idw

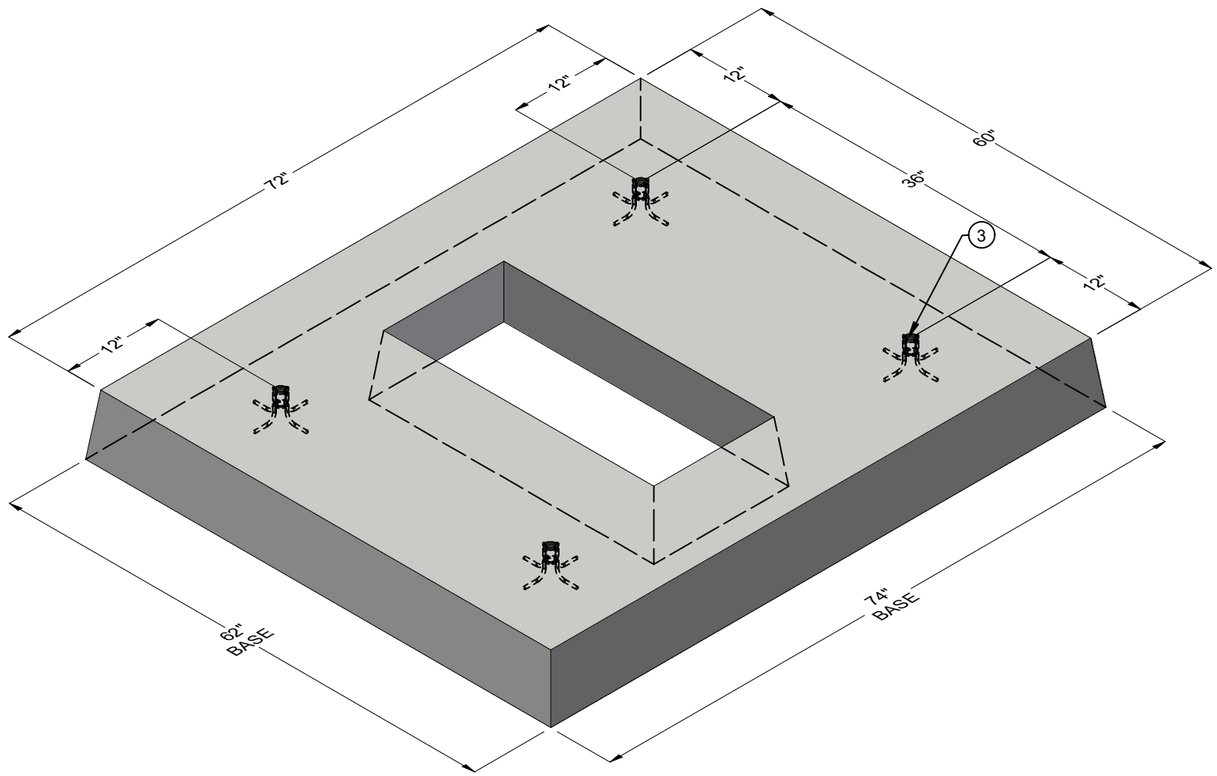

ISO REF

LIFTING NOTES
■ THIS CONCRETE PRODUCT IS DESIGNED TO BE LIFTED AT 2000 PSI WITH 4 LIFT CONNECTIONS EQUALLY LOADED TO 2 LIFTING POINTS AT A MINIMUM 60° SLING ANGLE, MEASURED FROM HORIZONTAL.

BURY DEPTH:	Above Ground to Above Ground		
WATER LEVEL:	Below Structure	WEIGHT:	2664.01 Lbs
DESIGN SPEC:	ASTM C857	LOADING SPEC:	A-03 (300 psf)
REINFORCEMENT TYPE:	Rebar	LIFTING TYPE:	Insert

JENSEN PRECAST EST. 1968

WWW.JENSENPRECAST.COM

©2019 Jensen Precast- All rights reserved.
All materials appearing as Jensen Precast documents and the like are proprietary work product and are protected under U.S. copyright and other laws.
Unless in conjunction with business conducted with Jensen Precast, any use of Jensen Precast work product without express, written consent is prohibited, and recipient is prohibited from distributing any and all work product to non-approved third parties under penalty of civil action.

REVISION HISTORY			
REV	DESCRIPTION	DATE	BY
A	2012-50105-NNV	12/04/2020	ACHO

DESCRIPTION:	Pad PD6072x8 LIBERTY UTILITY PE0030U CASTING LAYOUT		REV: A-1
PART NUMBER:	200046892	DRAWN BY: ACHO	SHEET: 1 OF 2
CREATED:	5/18/2017	MODIFIED: 12/4/2020	

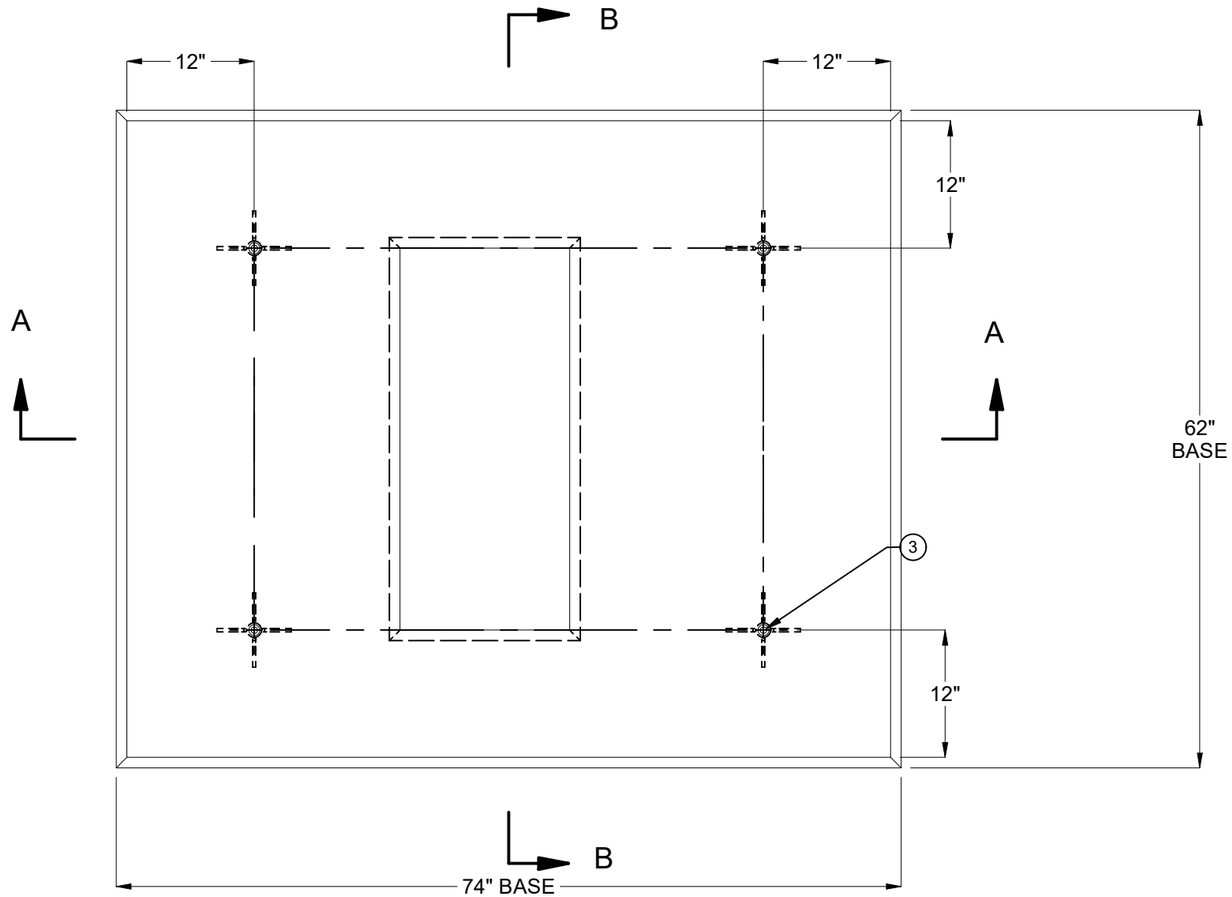

PLAN VIEW

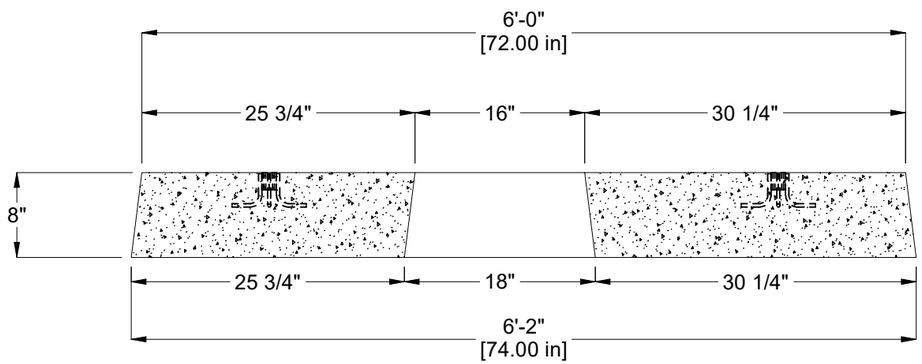

SECTION A-A

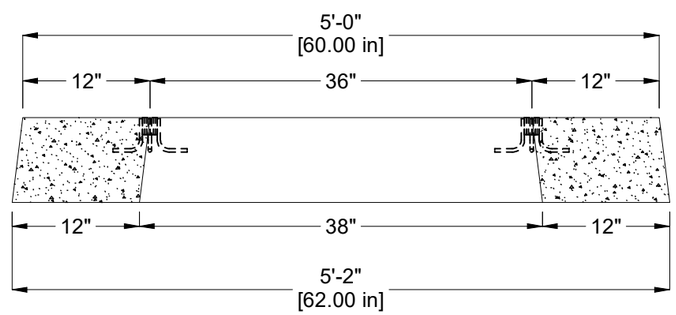

SECTION B-B

BURY DEPTH:	Above Ground to Above Ground		
WATER LEVEL:	Below Structure	WEIGHT:	2664.01 Lbs
DESIGN SPEC:	ASTM C857	LOADING SPEC:	A-03 (300 psf)
REINFORCEMENT TYPE:	Rebar	LIFTING TYPE:	Insert

JENSEN PRECAST EST. 1968

WWW.JENSENPRECAST.COM

©2019 Jensen Precast- All rights reserved.
All materials appearing as Jensen Precast documents and the like are proprietary work product and are protected under U.S. copyright and other laws.
Unless in conjunction with business conducted with Jensen Precast, any use of Jensen Precast work product without express, written consent is prohibited, and recipient is prohibited from distributing any and all work product to non-approved third parties under penalty of civil action.

DESCRIPTION:	Pad PD6072x8 LIBERTY UTILITY PE0030U CASTING DRAWING		
PART NUMBER:	200046892	DRAWN BY:	ACHO
CREATED:	5/18/2017	MODIFIED:	12/4/2020

REV: A-1

SHEET: 2 OF 2

200046892.idw