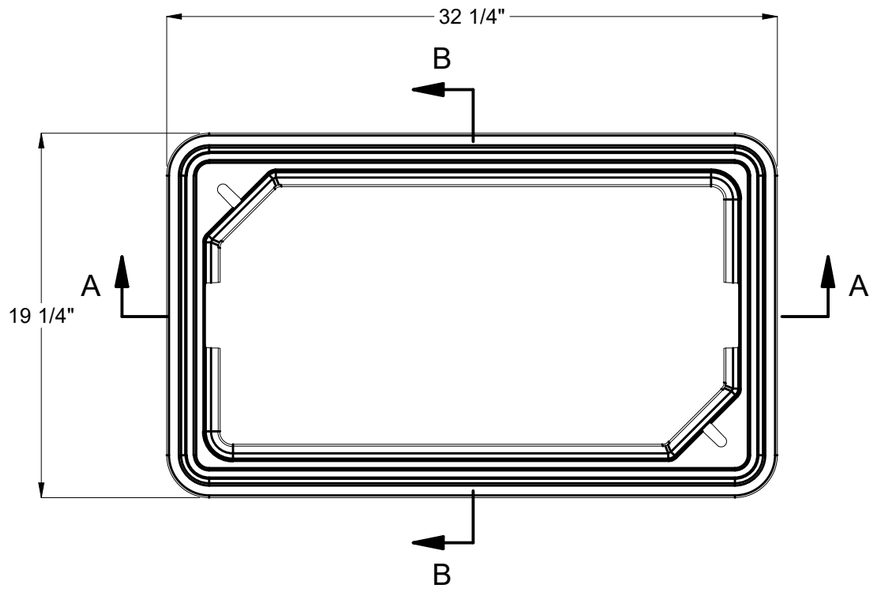

BILL OF MATERIALS

ITEM	UNIT QTY	QTY	PART NUMBER	DESCRIPTION
1	0.692 ft^3	0.692 ft^3	100035038	CONCRETE COMPOSITE BOX MIX BRUCE
2	1	2	100021840	SQUARE NUT 1/2-13 304SS
3	1	2	100022548	HPC PLUGS 5/8X1-3/8-14-2 PE-LD67 BLK

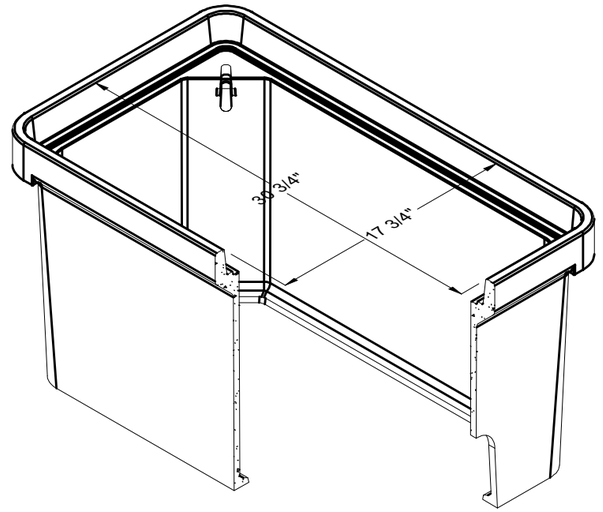

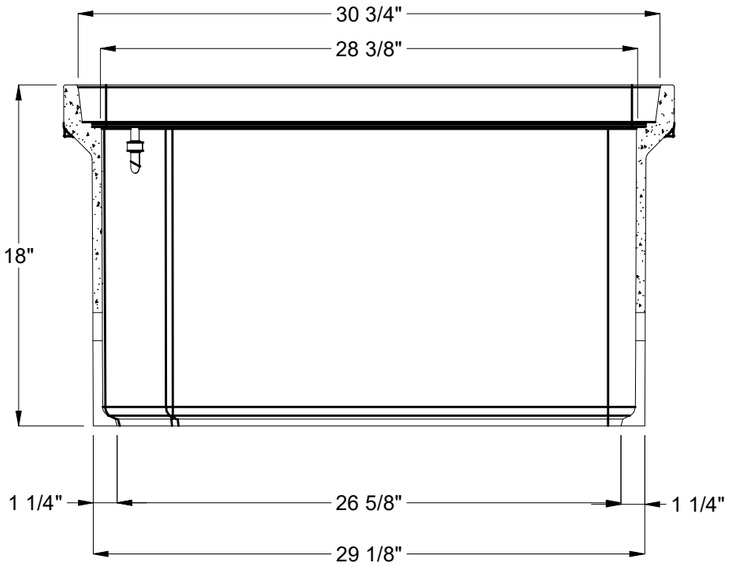

SECTION A-A

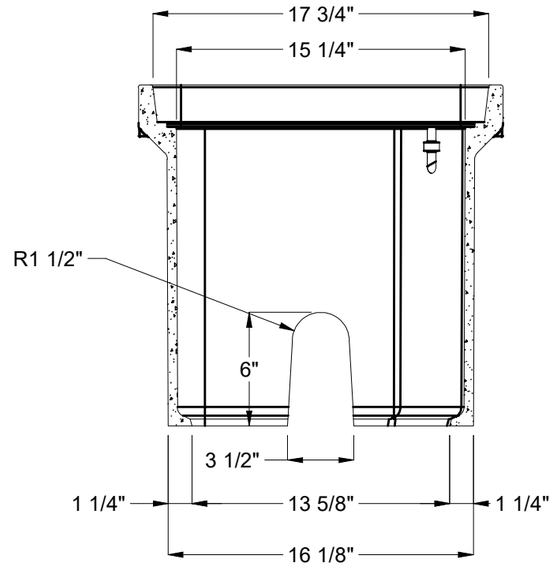

SECTION B-B

REVISION HISTORY

REV	DESCRIPTION	DATE	BY
A	INITIAL RELEASE - 2011-20587	11/30/2020	BGD
A-3	DESCRIPTION CHANGE	2/6/2023	MB

PALLET QUANTITY:	4	APPROX. WEIGHT:	84.65 lbs
CERTIFICATION:	A2LA	DESIGN/TEST LOAD:	
DESIGN SPEC:	ANSI/SCTE-77	LOADING SPEC:	
AGENCY:		AGENCY SPEC:	

JENSEN COMPOSITES

WWW.JENSENPRECAST.COM

©2018 Jensen Precast- All rights reserved.
All materials appearing as Jensen Precast documents and the like are proprietary work product and are protected under U.S. copyright and other laws.
Unless in conjunction with business conducted with Jensen Precast, any use of Jensen Precast work product without express, written consent is prohibited, and recipient is prohibited from distributing any and all work product to non-approved third parties under penalty of civil action.

DESCRIPTION: HPC 1730x18 Polymer Box, 1/2-13 SS Nut, Mousehole

REV: A-4

PART #:	200046284	DRAWN BY:	M. Baumann
CREATED:	11/23/2020	MODIFIED:	2/6/2023

SHEET: 1 OF 1

200046284.idw