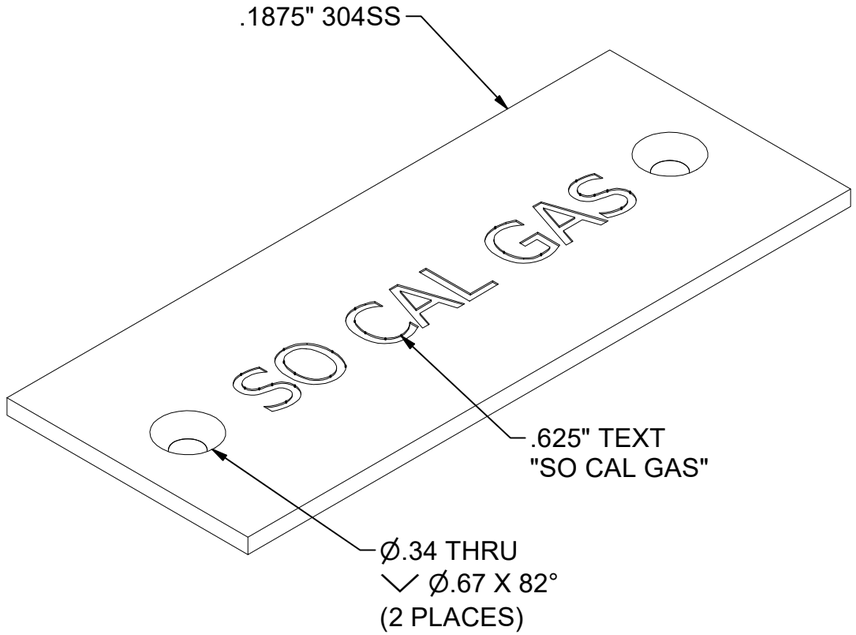

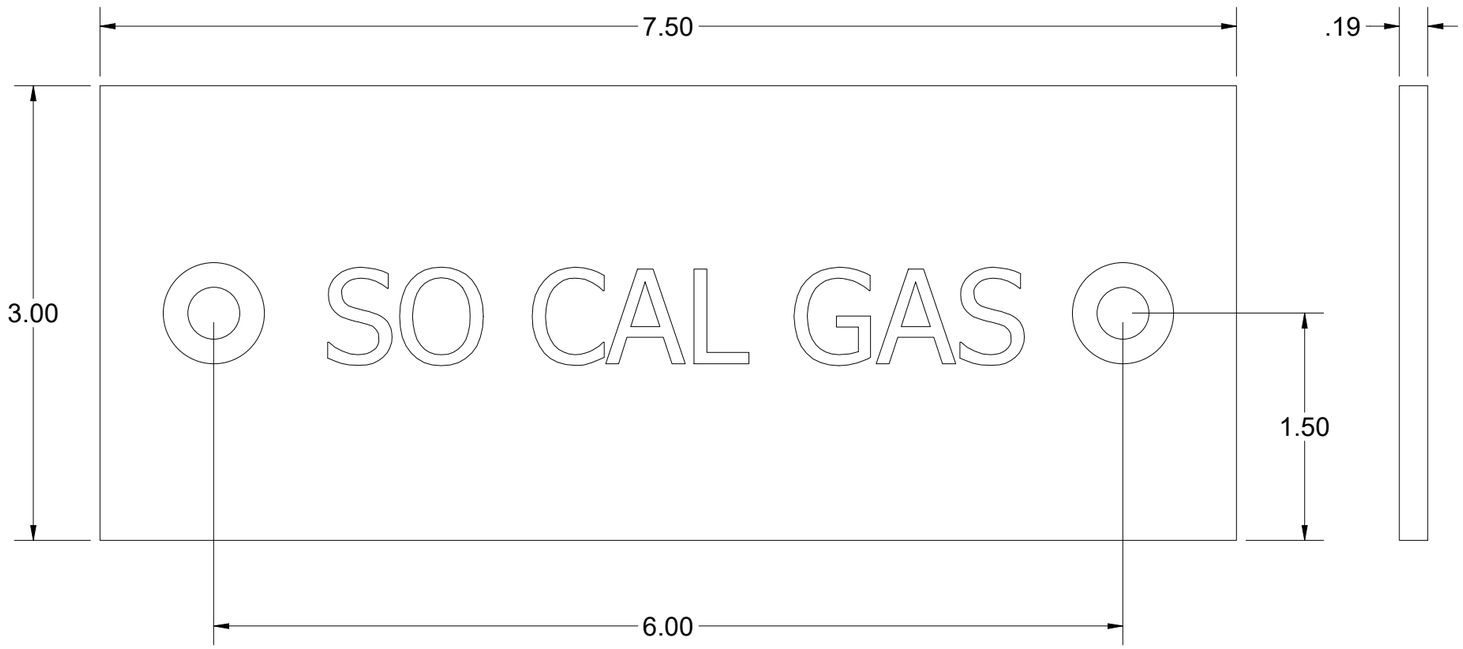

20004612 2.idw

ASTM C1802: Level X

Customer Designed - Jensen Metaltech / Jensen Precast assumes no responsibility that cover is suitable for loading condition and application.

SURFACE:	Smooth	FINISH:	Raw
WEIGHT:	0.15 lbs	MARKING:	As Noted

JENSEN METALTECH
450 E. GLENDALE AVE. SPARKS. NV 89431
775-352-2716 FAX: 755-358-8127
JENSENMETALTECH.COM

©2020 Jensen Precast- All rights reserved.
All materials appearing as Jensen Precast documents and the like are proprietary work product and are protected under U.S. copyright and other laws.
Unless in conjunction with business conducted with Jensen Precast, any use of Jensen Precast work product without express, written consent is prohibited, and recipient is prohibited from distributing any and all work product to non-approved third parties under penalty of civil action.

DESCRIPTION:	FONT NAMEPLATE SO CAL GAS FONT NAMEPLATE SO CAL GAS			REV:	A-2
PART NUMBER:	200046122	DRAWN BY:	E. Massey	SHEET:	1
CREATED:	11/6/2020	MODIFIED:	11/24/2020		

BILL OF MATERIALS

ITEM	UNIT QTY	QTY	PART NUMBER	DESCRIPTION
1	1	1	100006739	FONTANA NAME PLATE SS BLANK

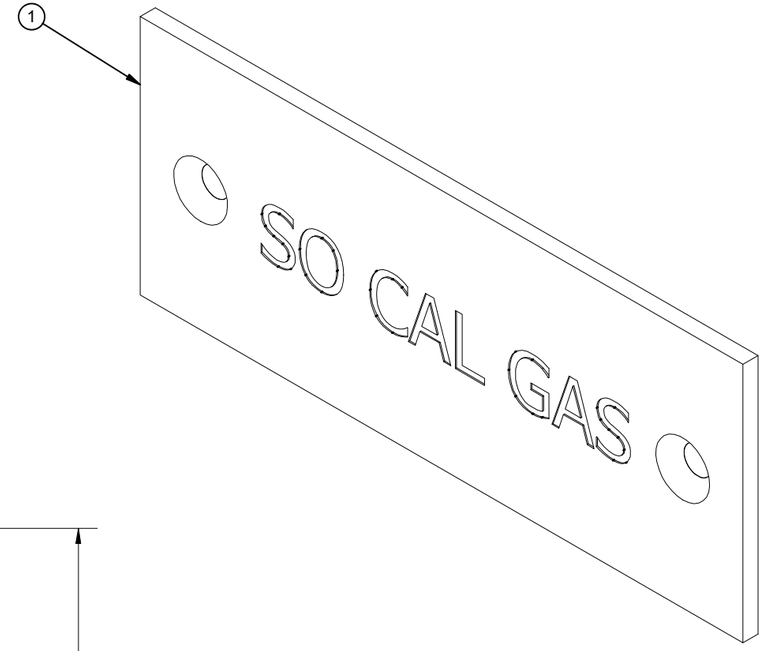

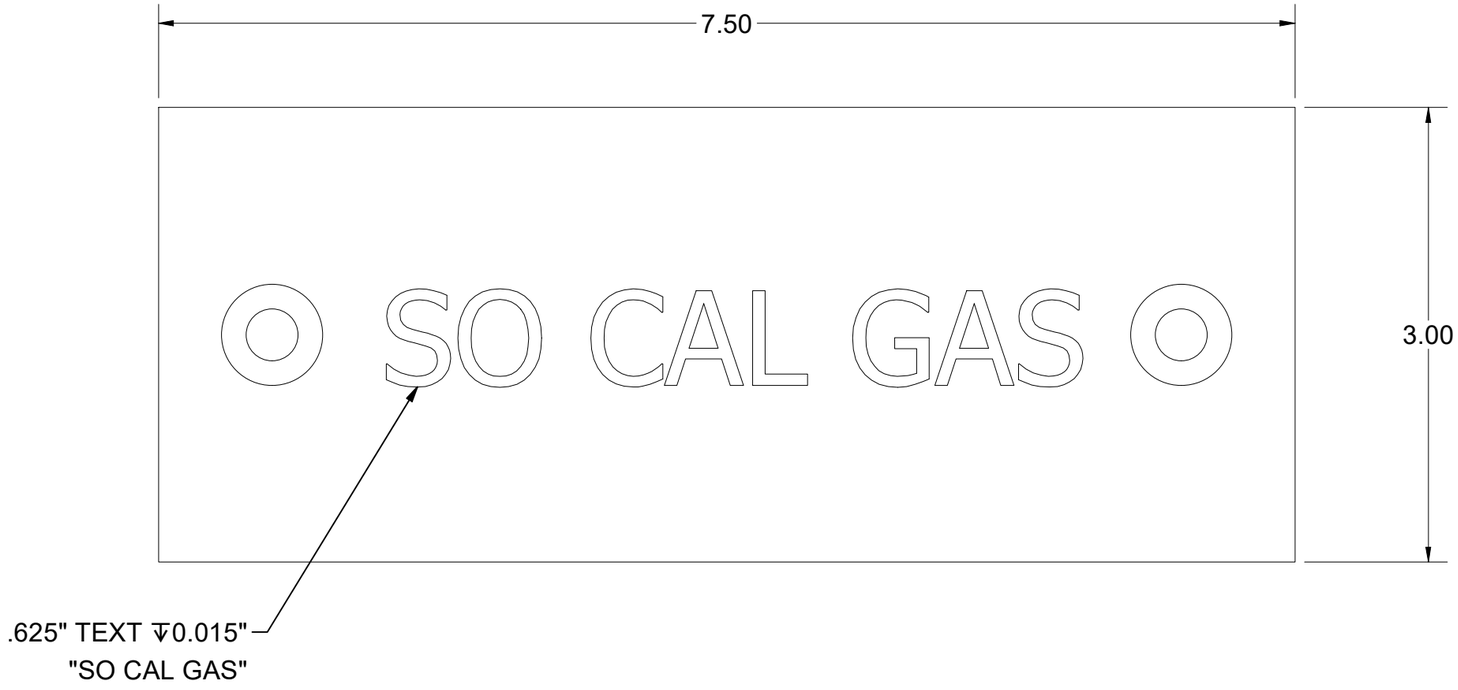

200046122.idw

MATERIAL FINISH: Raw	JENSEN METALTECH 450 E. GLENDALE AVE. SPARKS. NV 89431 775-352-2716 FAX: 755-358-8127 *JENSENMETALTECH.COM*	©2020 Jensen Precast- All rights reserved. All materials appearing as Jensen Precast documents and the like are proprietary work product and are protected under U.S. copyright and other laws. Unless in conjunction with business conducted with Jensen Precast, any use of Jensen Precast work product without express, written consent is prohibited, and recipient is prohibited from distributing any and all work product to non-approved third parties under penalty of civil action.	PART NUMBER & DESCRIPTION: 200046122 FONT NAMEPLATE SO CAL GAS	REV: A-2
MATERIAL SURFACE: Smooth			WEIGHT: 0.15 Lbs CREATED: 11/6/2020	DRAWN BY: E. Massey MODIFIED: 11/24/2020	SHEET: 1

BURN LIST - BOM

PART NUMBER	ITEM QTY	DESCRIPTION	STOCK NUMBER	MATERIAL	MASS
100006739	1	FONTANA NAME PLATE SS BLANK	100007819	SHT 304SS SM RAW .1875	1.197 lbmass

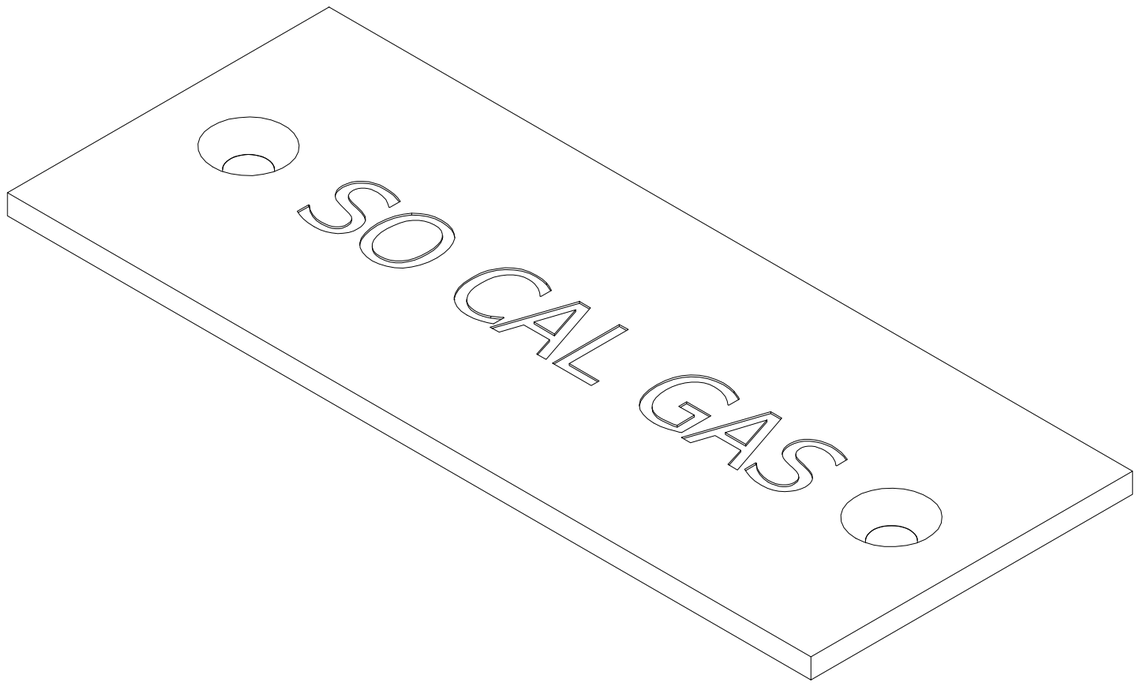

200046122.idw

MATERIAL FINISH: Raw	JENSEN METALTECH 450 E. GLENDALE AVE. SPARKS. NV 89431 775-352-2716 FAX: 755-358-8127 *JENSENMETALTECH.COM*	©2020 Jensen Precast- All rights reserved. All materials appearing as Jensen Precast documents and the like are proprietary work product and are protected under U.S. copyright and other laws. Unless in conjunction with business conducted with Jensen Precast, any use of Jensen Precast work product without express, written consent is prohibited, and recipient is prohibited from distributing any and all work product to non-approved third parties under penalty of civil action.	PART NUMBER & DESCRIPTION: 200046122 FONT NAMEPLATE SO CAL GAS		REV: A-2
MATERIAL SURFACE: Smooth			WEIGHT: 0.15 Lbs	DRAWN BY: E. Massey	SHEET: 2
			CREATED: 11/6/2020	MODIFIED: 11/24/2020	