DESIGN NOTES
■ MINIMUM EXCAVATION SIZE:11'-8" X 6'-7" DEPTH REQ'D.
■ FOR COMPLETE DESIGN AND PRODUCT INFORMATION CONTACT JENSEN PRECAST.

BILL OF MATERIALS

ITEM	QTY	PART NUMBER	DESCRIPTION
1	1	200045199	Tank JP 1500 Gallon 4 Inch Rect. Bottom Section Single Baffle
2	1	200045205	Tank JP 1500 Gallon x 8 Slab Top 24 EBE
3	3.000 ul	100013648	SEALANT JOINT BUTYL RUBBER ASTM C-990 AND M198 CS-102 1IN EQUIV X14.5FT PER ROLL

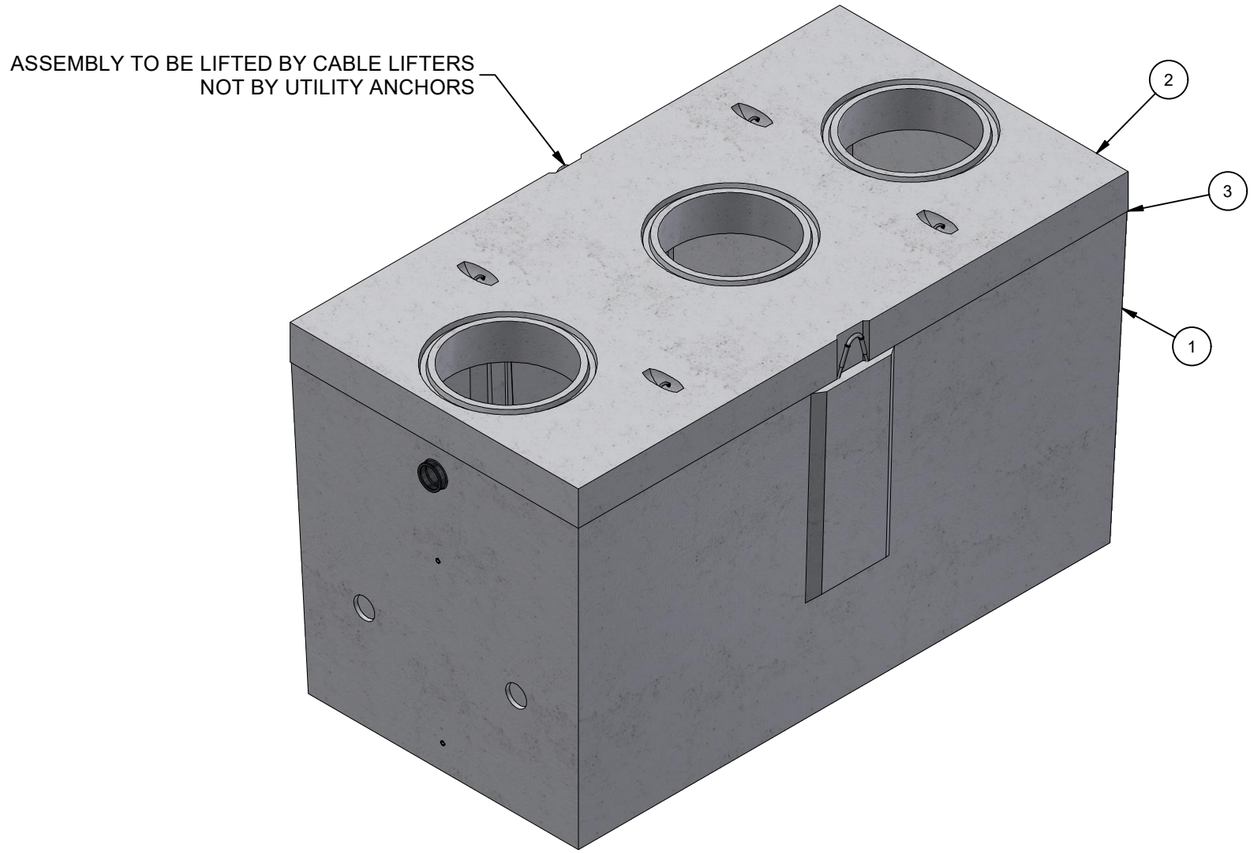

ISO LAYOUT

200045214.idw

LIFTING NOTES
■ FIELD INSTALLATION: PLANT DEMOLDING: MINIMUM HANDLING CONCRETE STRENGTH F'c = 2500 PSI RIGGING EQUALIZER REQUIRED TO EQUALIZE LOAD TO 2 LIFTING POINTS WITH A SLING ANGLE OF 90°

CHANGE HISTORY			
NO.	DESCRIPTION	DATE	BY
A	DRAWING CREATED	10/20/2020	MRV
B	TOP SLAB LIFTING UPDATED	2/1/2020	T.Larson

BURY DEPTH:	1.1' - 10.0' to Top of Top Slab		
WATER LEVEL:	Below Structure	APPROX. WEIGHT:	17166.79 Lbs
DESIGN SPEC:	ASTM C890,ACI 318	LOADING SPEC:	A-16 (AASHTO HS20-44)
REINFORCEMENT TYPE:		LIFTING TYPE:	Cable

JENSEN PRECAST EST. 1968

WWW.JENSENPRECAST.COM

©2021 Jensen Precast- All rights reserved.
All materials appearing as Jensen Precast documents and the like are proprietary work product and are protected under U.S. copyright and other laws.
Unless in conjunction with business conducted with Jensen Precast, any use of Jensen Precast work product without express, written consent is prohibited, and recipient is prohibited from distributing any and all work product to non-approved third parties under penalty of civil action.

DESCRIPTION:	Tank JP 1500 Gallon 4 Inch Assembly EBE Single Baffle CASTING LAYOUT		REV: B-1
PART NUMBER:	200045214	DRAWN BY:	M.Vallarino
CREATED:	10/20/2020	MODIFIED:	3/10/2021
			SHEET: 1 OF 1