NOTES
■ FOR COMPLETE DESIGN AND PRODUCT INFORMATION CONTACT JENSEN PRECAST.

BILL OF MATERIALS

ITEM	QTY	PART NUMBER	DESCRIPTION
1	11.447 ft^3	100002728	CONCRETE MIX GENERIC 4000 PSI
2	6	100002854	INSERT MH RUNG PLASTIC SP SOCKET
3	1	200029448	WWR REINFORCING CAGE 200029448

ALTERNATE REINFORCING OPTIONS

PART NUMBER	DESCRIPTION
200041818	BAR REINFORCING CAGE 200041818
200041819	MBK WIRE REINFORCING CAGE 200041819

200042289.idw

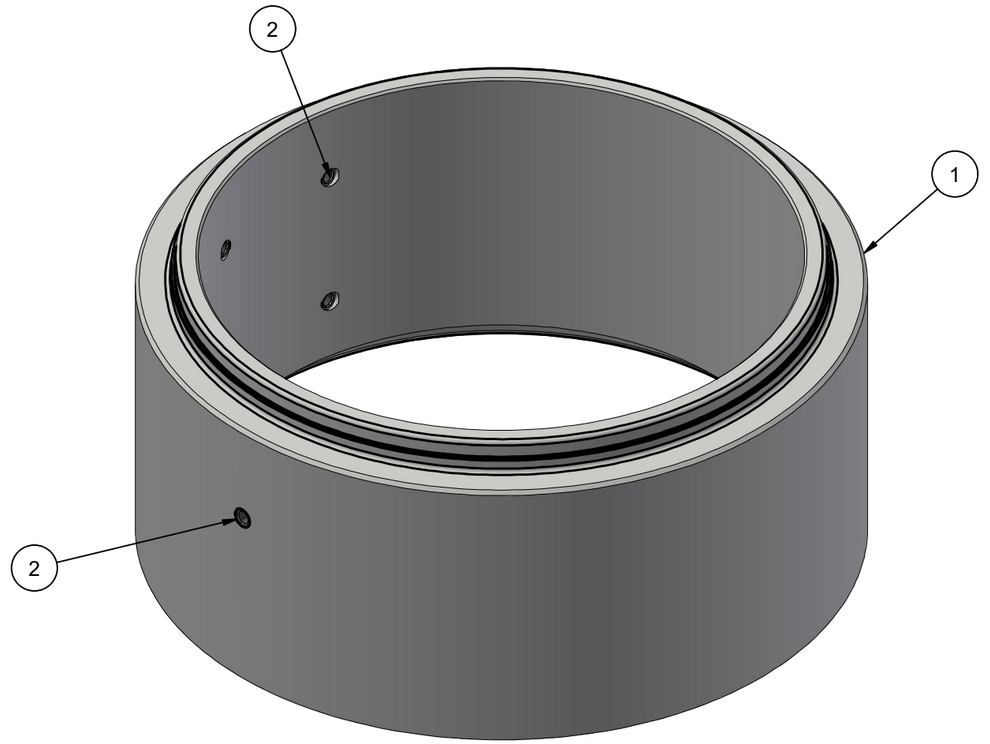

ISOMETRIC VIEW

LIFTING NOTES
■ DEMOLDING & INSTALLATION: THIS CONCRETE PRODUCT IS DESIGNED TO BE LIFTED AT 2500 PSI WITH 2 CONNECTIONS EQUALLY LOADED 2 LIFTING POINTS AT A MINIMUM 45°, MAXIMUM 90° SLING ANGLE, MEASURED FROM HORIZONTAL.

BURY DEPTH:	0.0' - 99.0' to Top		
WATER LEVEL:	0.0'	WEIGHT:	1720.67 Lbs
DESIGN SPEC:	ASTM C478	LOADING SPEC:	A-16 (AASHTO HS20-44)
REINFORCEMENT TYPE:	WWR Plain	LIFTING TYPE:	SP Socket

JENSEN PRECAST EST. 1968

WWW.JENSENPRECAST.COM

©2018 Jensen Precast- All rights reserved.
All materials appearing as Jensen Precast documents and the like are proprietary work product and are protected under U.S. copyright and other laws.
Unless in conjunction with business conducted with Jensen Precast, any use of Jensen Precast work product without express, written consent is prohibited, and recipient is prohibited from distributing any and all work product to non-approved third parties under penalty of civil action.

REVISION HISTORY

REV	DESCRIPTION	DATE	BY
A	INITIAL RELEASE	12/02/2018	

DESCRIPTION:	Manhole D4858x24 Barrel TU Step Holes CASTING LAYOUT		REV: A-7
PART NUMBER:	200042289	DRAWN BY: V. Lund	SHEET: 1 OF 2
CREATED:	12/2/2018	MODIFIED: 1/20/2019	

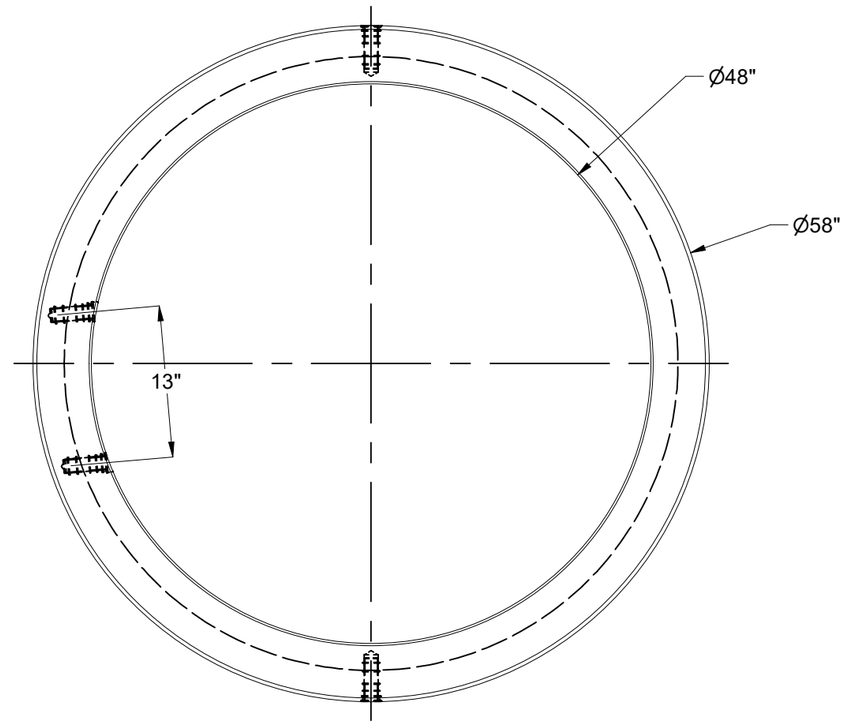

PLAN VIEW

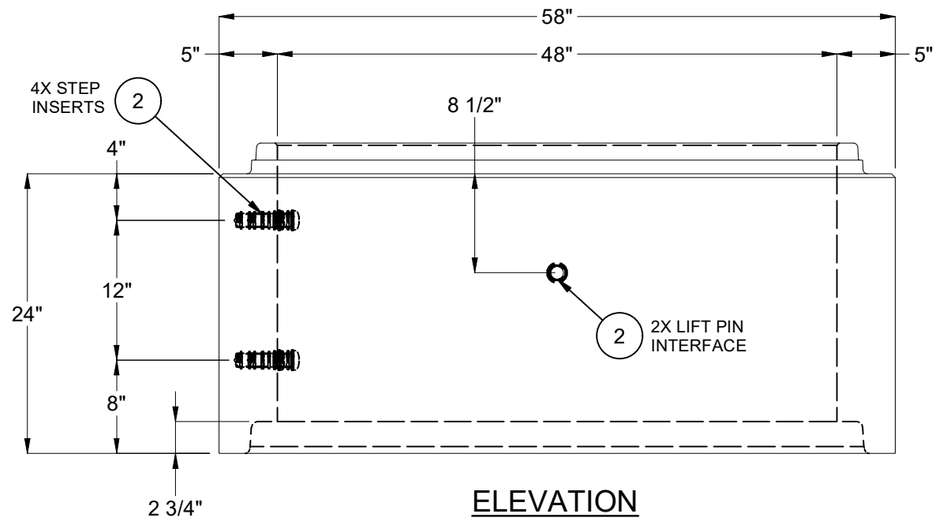

ELEVATION

BURY DEPTH:	0.0' - 99.0' to Top		
WATER LEVEL:	0.0'	WEIGHT:	1720.67 Lbs
DESIGN SPEC:	ASTM C478	LOADING SPEC:	A-16 (AASHTO HS20-44)
REINFORCEMENT TYPE:	WWR Plain	LIFTING TYPE:	SP Socket

JENSEN PRECAST EST. 1968

WWW.JENSENPRECAST.COM

©2018 Jensen Precast- All rights reserved.
All materials appearing as Jensen Precast documents and the like are proprietary work product and are protected under U.S. copyright and other laws.
Unless in conjunction with business conducted with Jensen Precast, any use of Jensen Precast work product without express, written consent is prohibited, and recipient is prohibited from distributing any and all work product to non-approved third parties under penalty of civil action.

DESCRIPTION:	Manhole D4858x24 Barrel TU Step Holes CASTING DRAWING		REV: A-7
PART NUMBER:	200042289	DRAWN BY:	V. Lund
CREATED:	12/2/2018	MODIFIED:	1/20/2019
			SHEET: 2 OF 2

200042289.idw