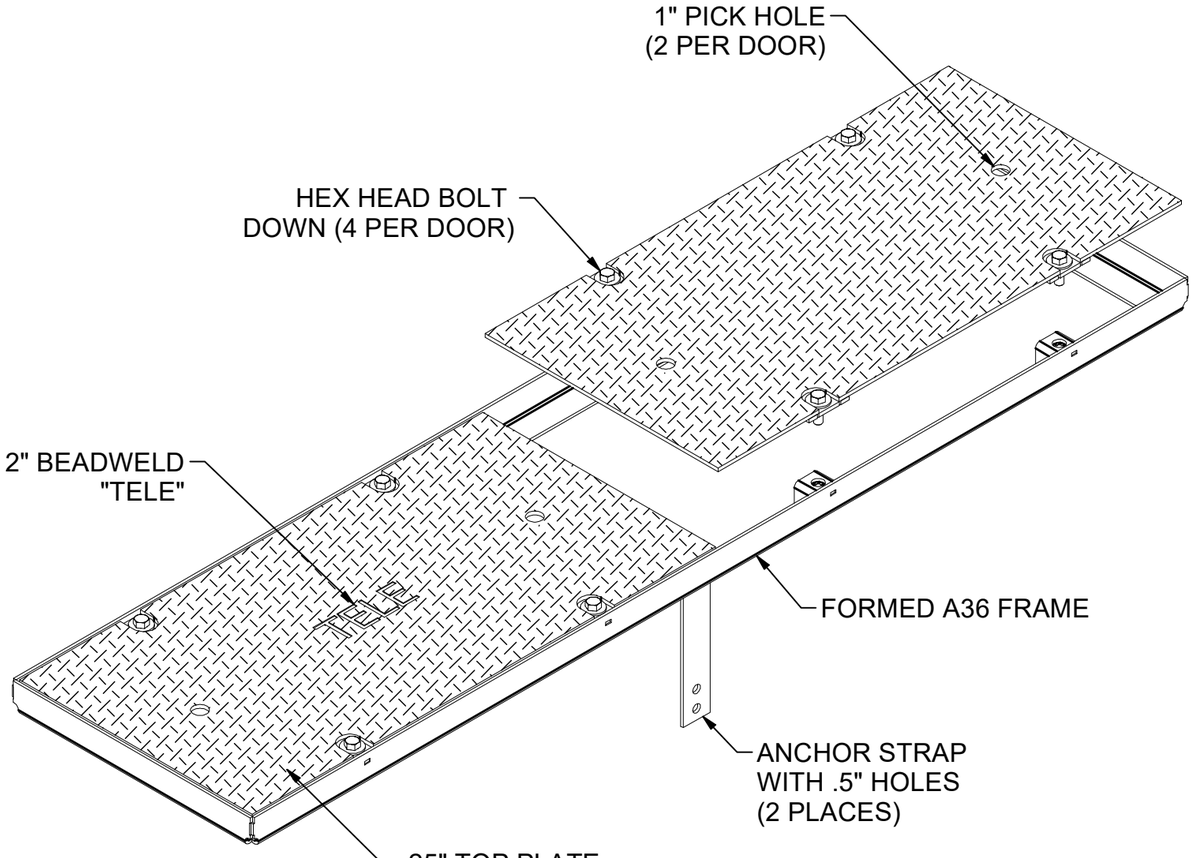

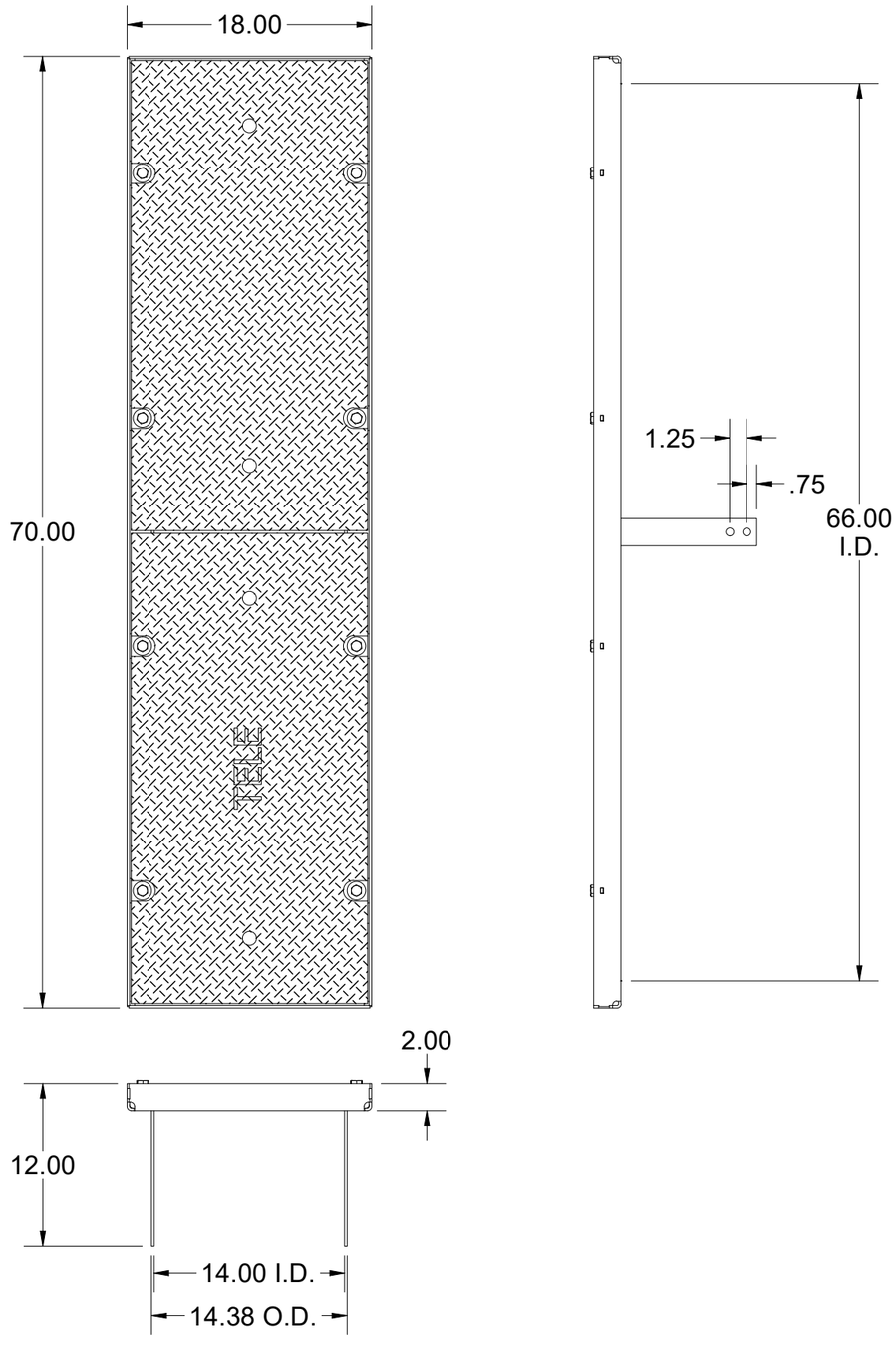

200041035.idw

ASTM C1802: Level 02

300 psf, or 600 lb load on 5.5" x 5.5" footprint restricted to areas of pedestrian use and light maintenance vehicles use, and other areas that are inaccessible to all other vehicle traffic.

SURFACE:	Diamond Plate	FINISH:	Painted
WEIGHT:	138.78 lbs	MARKING:	None

JENSEN METALTECH
450 E. GLENDALE AVE. SPARKS. NV 89431
775-352-2716 FAX: 755-358-8127
JENSENMETALTECH.COM

©2020 Jensen Precast- All rights reserved. All materials appearing as Jensen Precast documents and the like are proprietary work product and are protected under U.S. copyright and other laws.
Unless in conjunction with business conducted with Jensen Precast, any use of Jensen Precast work product without express, written consent is prohibited, and recipient is prohibited from distributing any and all work product to non-approved third parties under penalty of civil action.

DESCRIPTION: CAS2-1466-AD2-DP-P-BLACK-LV-OH03-BW-TELE

14x66 Cover Assembly (ASTM Load Level 02, 2 Door, Steel, Drag Off, Diamond Plate, Painted BLACK, ,) OH 03

REV:

SHEET: 1

PART NUMBER:	200041035	DRAWN BY:	E. Massey
CREATED:	6/26/2020	MODIFIED:	7/13/2020

BILL OF MATERIALS

ITEM	UNIT QTY	QTY	PART NUMBER	DESCRIPTION
1	1	1	200041043	CAS2-1466-AD2-DP-R-LV-OH03

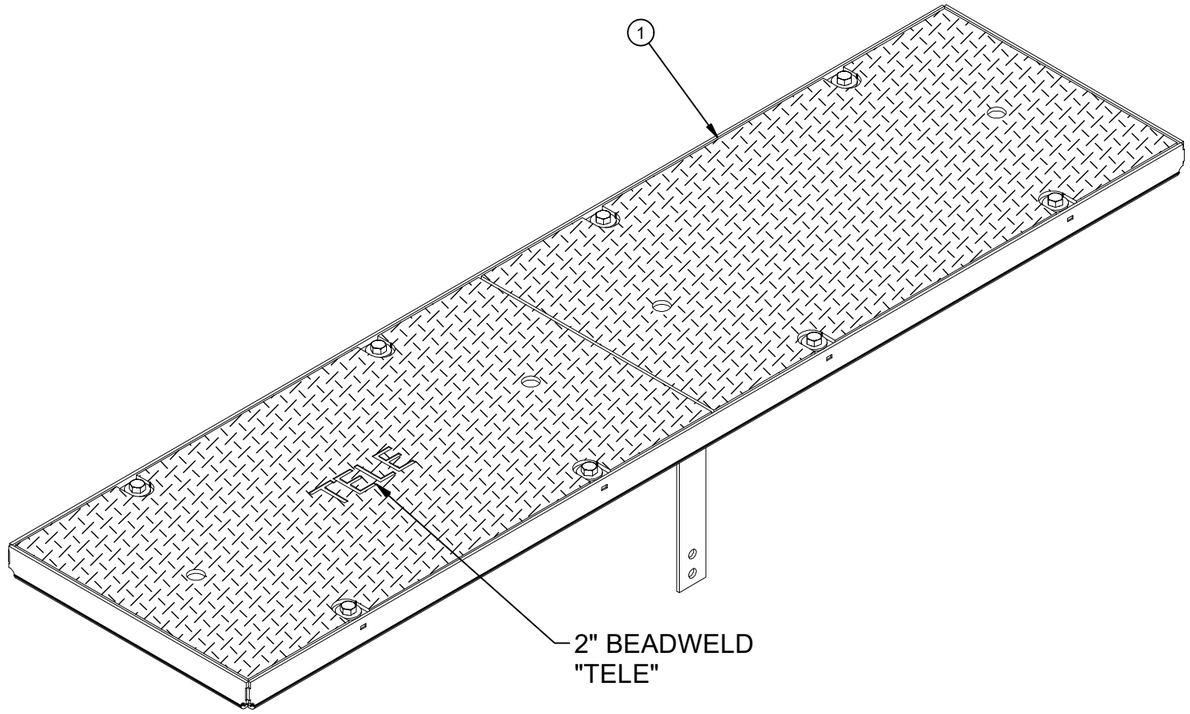

200041035.idw

MATERIAL FINISH: Painted	450 E. GLENDALE AVE. SPARKS. NV 89431 775-352-2716 FAX: 755-358-8127 *JENSENMETALTECH.COM*	©2020 Jensen Precast- All rights reserved. All materials appearing as Jensen Precast documents and the like are proprietary work product and are protected under U.S. copyright and other laws. Unless in conjunction with business conducted with Jensen Precast, any use of Jensen Precast work product without express, written consent is prohibited, and recipient is prohibited from distributing any and all work product to non-approved third parties under penalty of civil action.	PART NUMBER & DESCRIPTION: 200041035 CAS2-1466-AD2-DP-P-BLACK-LV-OH03-BW-TELE	REV: A
MATERIAL SURFACE: Diamond Plate			WEIGHT: 138.78 Lbs / DRAWN BY: E. Massey	SHEET: 1
			CREATED: 6/26/2020 / MODIFIED: 7/13/2020	

BURN LIST - BOM

PART NUMBER	ITEM QTY	DESCRIPTION	STOCK NUMBER	MATERIAL	MASS
200014354	8	Bolt Doubler	100007735	STL ASTM A36 SM-HRPO RAW .250	0.314 lbmass
200041041	2	Frame Component Steel Frame Side, Adjustable	100007734	STL ASTM A36 SM-HRPO 60X120 RAW .1875	13.551 lbmass
200041045	2	Frame Component Steel Frame End, Adjustable	100007734	STL ASTM A36 SM-HRPO 60X120 RAW .1875	3.281 lbmass
200041047	2	ANCHOR STRAP	100007734	STL ASTM A36 SM-HRPO 60X120 RAW .1875	1.042 lbmass
200041055	8	SPRING NUT BRACKET 1.3125" TALL	100007734	STL ASTM A36 SM-HRPO 60X120 RAW .1875	0.351 lbmass
200041057	2	Door Component Steel Plate, Top	100007736	SHT STL CQ DP RAW .25	46.135 lbmass
200041061	8	Door Component Steel Stiffener, Bar	100007734	STL ASTM A36 SM-HRPO 60X120 RAW .1875	0.499 lbmass

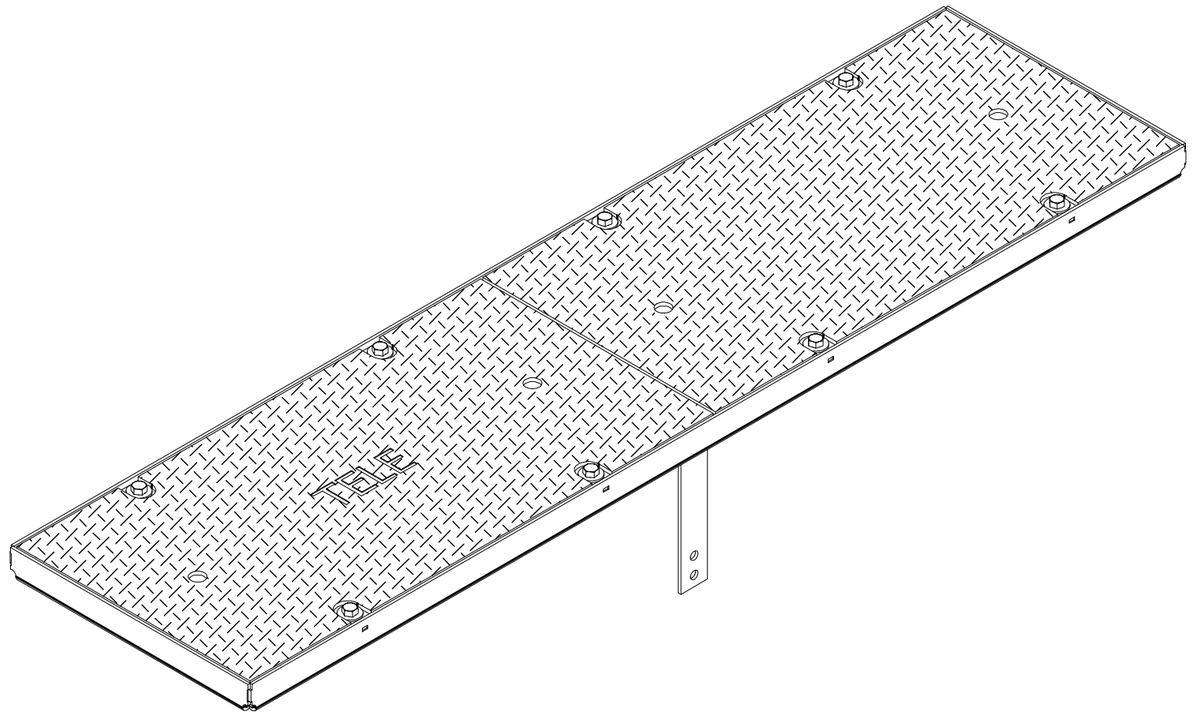

200041035.idw

MATERIAL FINISH: Painted

MATERIAL SURFACE: Diamond Plate

JENSEN METALTECH
450 E. GLENDALE AVE. SPARKS. NV 89431
775-352-2716 FAX: 755-358-8127
JENSENMETALTECH.COM

©2020 Jensen Precast- All rights reserved.
All materials appearing as Jensen Precast documents and the like are proprietary work product and are protected under U.S. copyright and other laws.
Unless in conjunction with business conducted with Jensen Precast, any use of Jensen Precast work product without express, written consent is prohibited, and recipient is prohibited from distributing any and all work product to non-approved third parties under penalty of civil action.

PART NUMBER & DESCRIPTION: 200041035
CAS2-1466-AD2-DP-P-BLACK-LV-OH03-BW-TELE

REV: A

WEIGHT: 138.78 Lbs

DRAWN BY: E. Massey

SHEET: 2

CREATED: 6/26/2020

MODIFIED: 7/13/2020

BILL OF MATERIALS

ITEM	UNIT QTY	QTY	PART NUMBER	DESCRIPTION
1	1	1	200041044	FAS-1466-AD2-R-LV-OH02
2	1	2	200041056	DAS2-SD-1466-D2-DP-R-LV
3	1	8	100007441	STRUT FITTING SPRING NUT 1/2-13 UNC 1-5/8 CHANNEL REGULAR SPRING ZINC
4	1	8	100007866	Round Push Nut, Steel, for 1/2" Screw Size
5	1	8	100003823	BOLT HEX 1/2-13 UNC 1.5 ZINC
6	1	8	100011418	WASHER FLAT 1/2 X 1 3/8 USS TYPE A ZINC

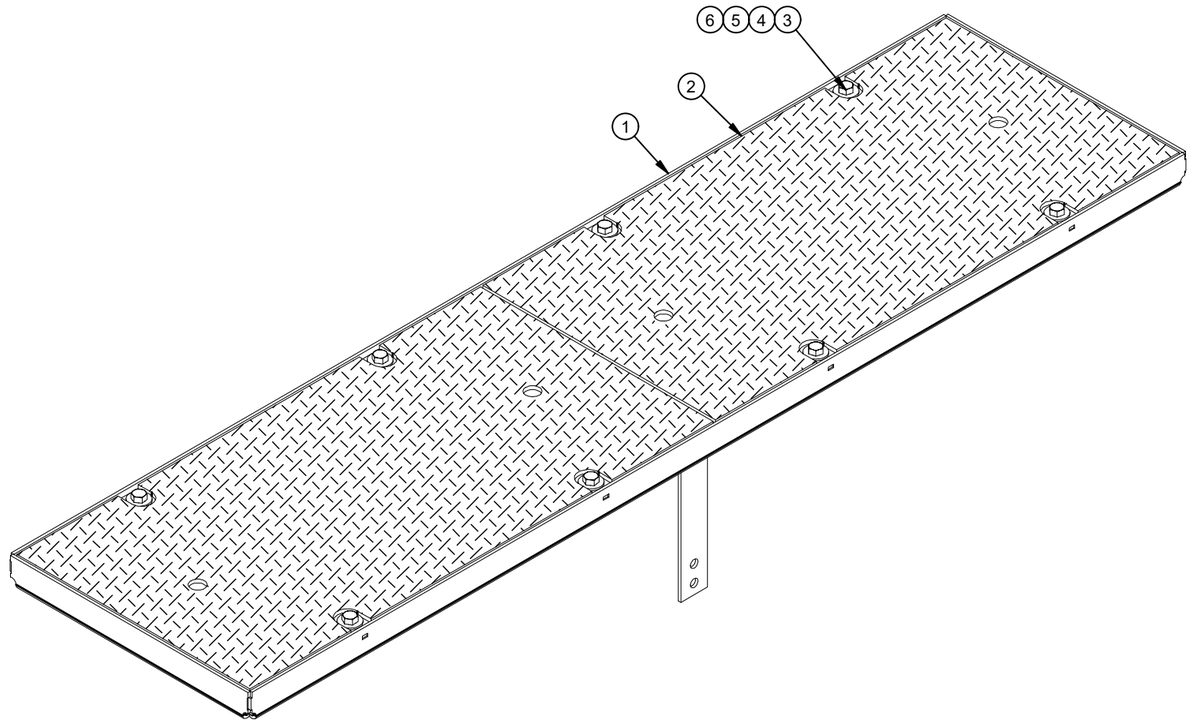

200041035.idw

MATERIAL FINISH: Raw	JENSEN METALTECH 450 E. GLENDALE AVE. SPARKS. NV 89431 775-352-2716 FAX: 755-358-8127 *JENSENMETALTECH.COM*	©2020 Jensen Precast- All rights reserved. All materials appearing as Jensen Precast documents and the like are proprietary work product and are protected under U.S. copyright and other laws. Unless in conjunction with business conducted with Jensen Precast, any use of Jensen Precast work product without express, written consent is prohibited, and recipient is prohibited from distributing any and all work product to non-approved third parties under penalty of civil action.	PART NUMBER & DESCRIPTION: 200041043 CAS2-1466-AD2-DP-R-LV-OH03	REV: A
MATERIAL SURFACE: Diamond Plate			WEIGHT: 138.85 Lbs CREATED: 6/26/2020	DRAWN BY: E. Massey MODIFIED: 7/13/2020	SHEET: 3

BILL OF MATERIALS

ITEM	UNIT QTY	QTY	PART NUMBER	DESCRIPTION
1	1	1	200041057	Door Component Steel Plate, Top
2	1	4	200014354	Bolt Doubler
3	1	4	200041061	Door Component Steel Stiffener, Bar

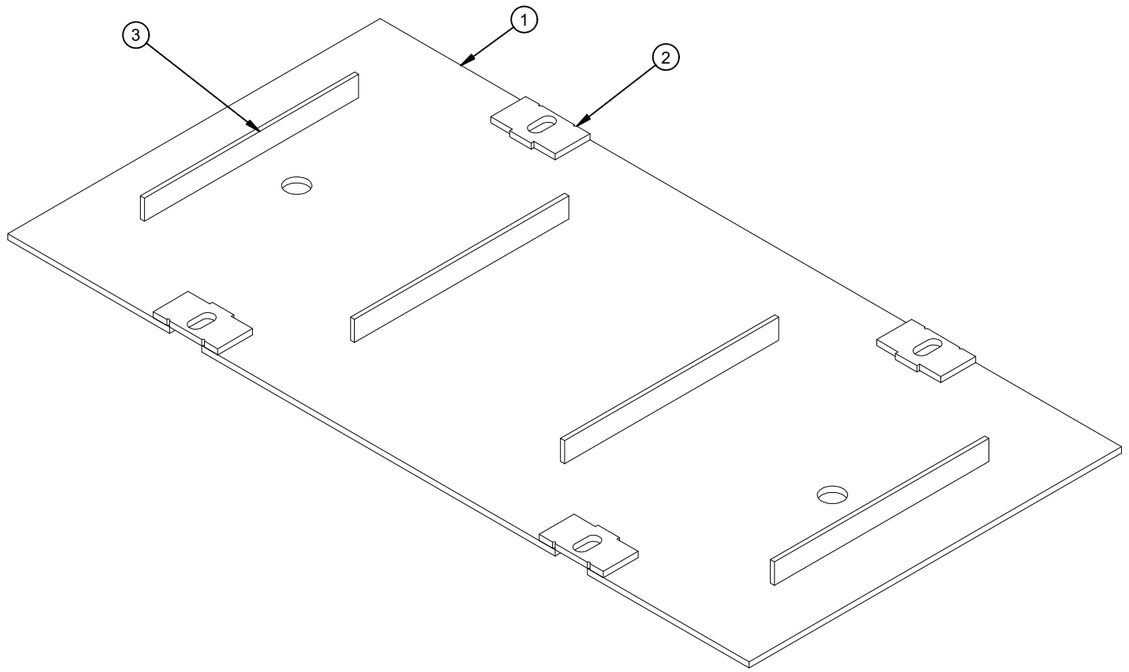

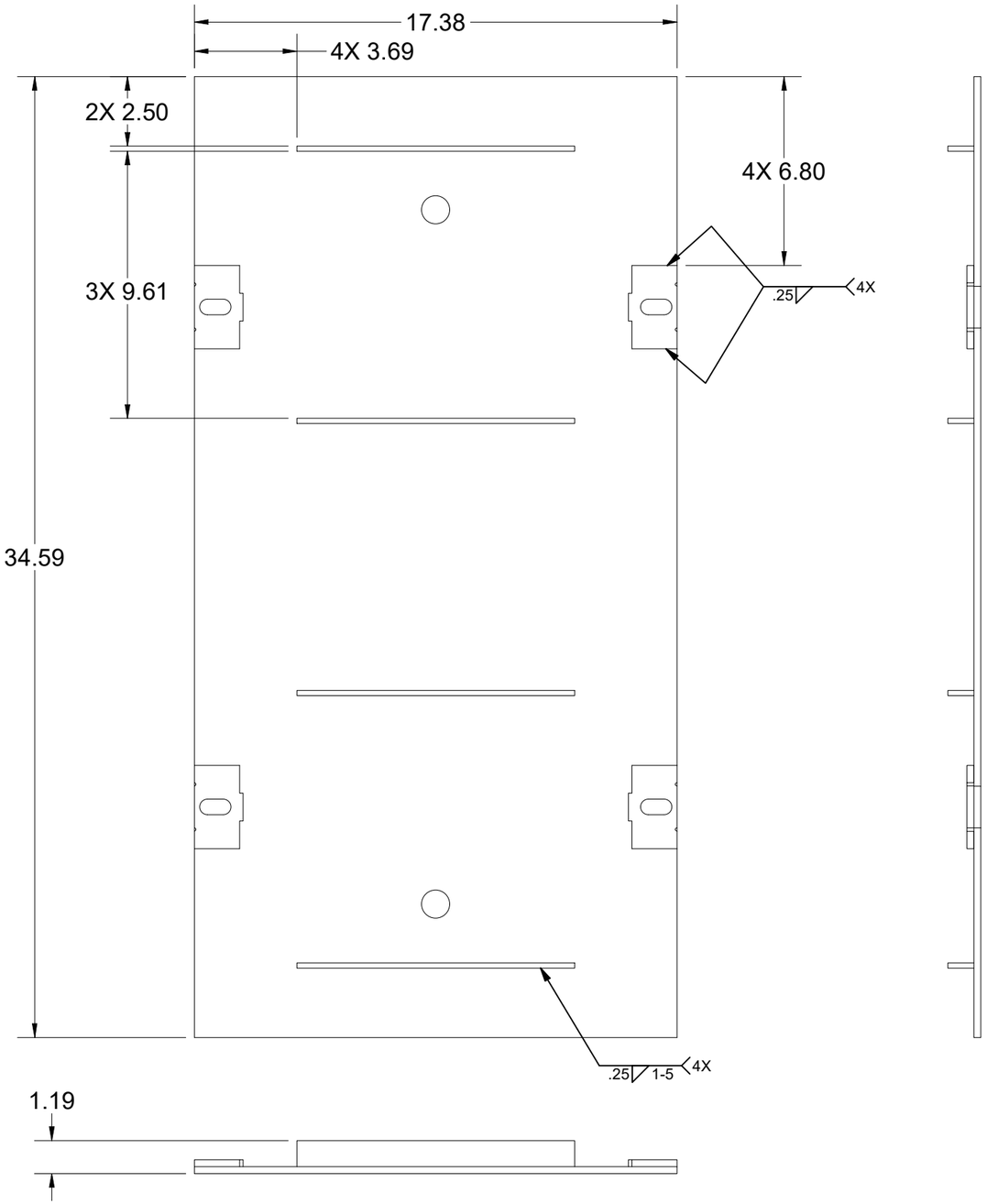

200041035.idw

MATERIAL FINISH: Raw	JENSEN METALTECH 450 E. GLENDALE AVE. SPARKS. NV 89431 775-352-2716 FAX: 755-358-8127 *JENSENMETALTECH.COM*	©2020 Jensen Precast- All rights reserved. All materials appearing as Jensen Precast documents and the like are proprietary work product and are protected under U.S. copyright and other laws. Unless in conjunction with business conducted with Jensen Precast, any use of Jensen Precast work product without express, written consent is prohibited, and recipient is prohibited from distributing any and all work product to non-approved third parties under penalty of civil action.	PART NUMBER & DESCRIPTION: 200041056 DAS2-SD-1466-D2-DP-R-LV / REV: A
MATERIAL SURFACE: Diamond Plate			WEIGHT: 49.39 Lbs / DRAWN BY: E. Massey / SHEET: 4
			CREATED: 6/26/2020 / MODIFIED: 7/13/2020

BILL OF MATERIALS

ITEM	UNIT QTY	QTY	PART NUMBER	DESCRIPTION
1	1	2	200041041	Frame Component Steel Frame Side, Adjustable
2	1	2	200041045	Frame Component Steel Frame End, Adjustable
3	1	2	200041047	ANCHOR STRAP
4	1	8	200041055	SPRING NUT BRACKET 1.3125" TALL

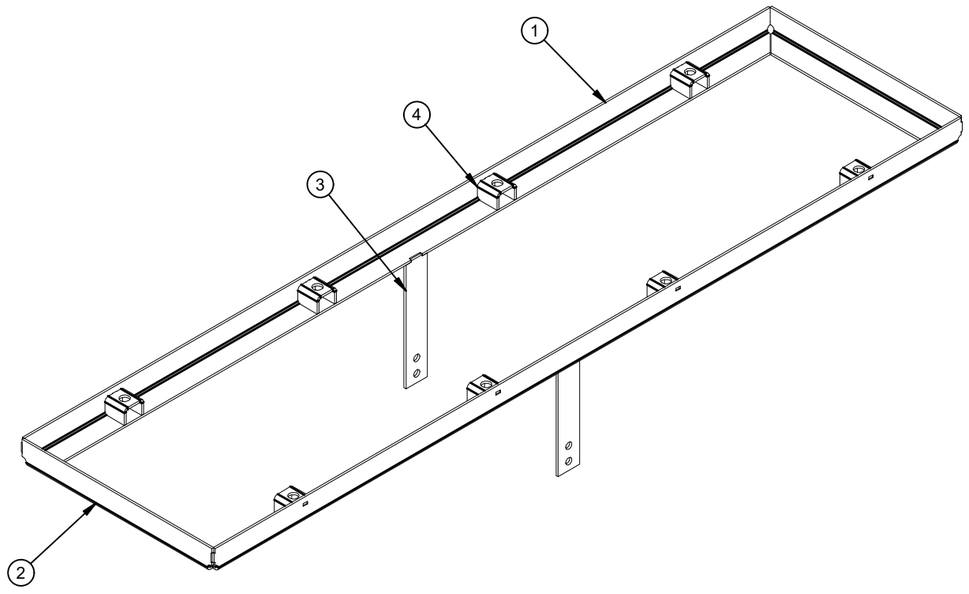

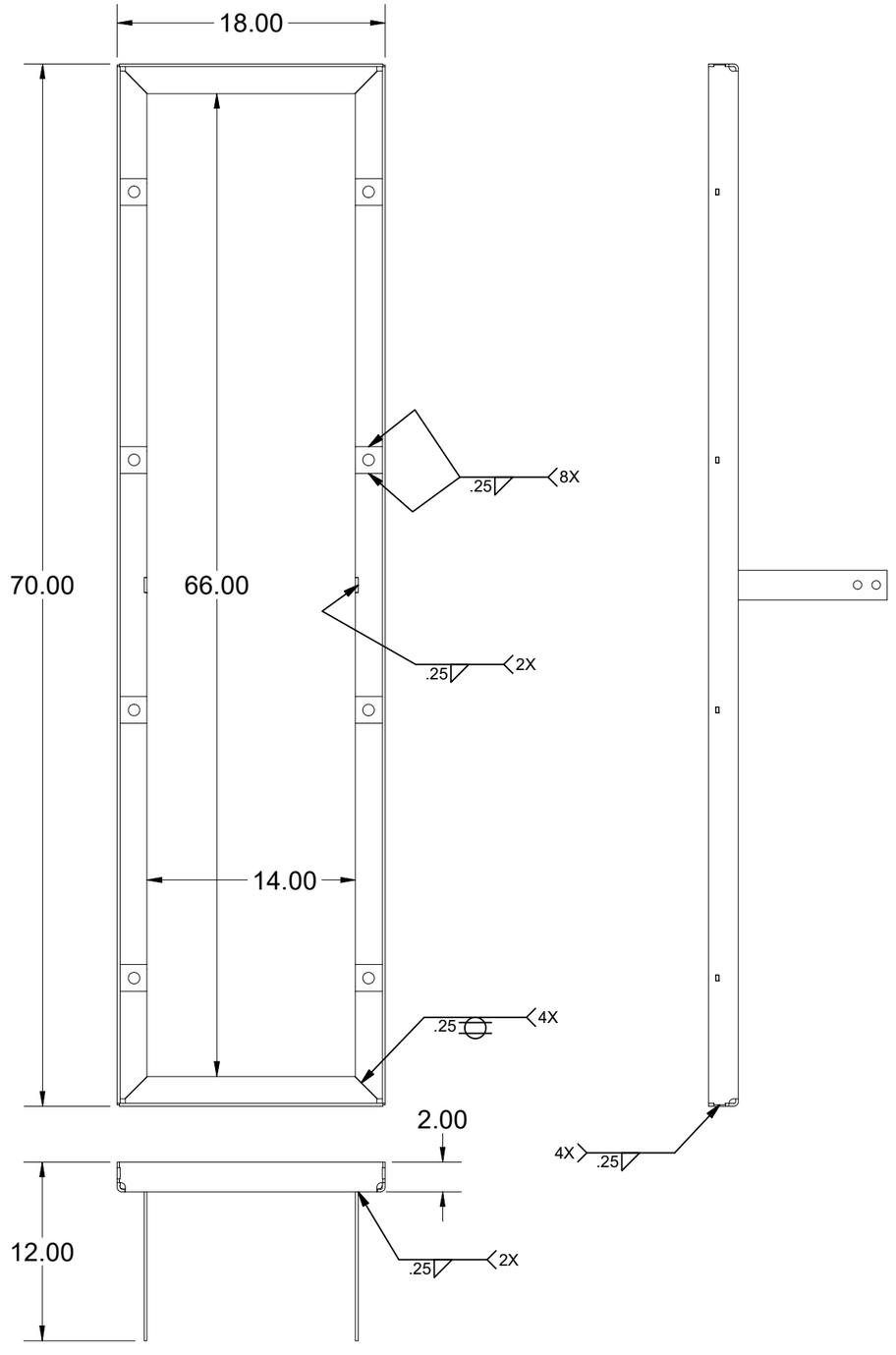

200041035.idw

MATERIAL FINISH: Raw	JENSEN METALTECH 450 E. GLENDALE AVE. SPARKS. NV 89431 775-352-2716 FAX: 755-358-8127 *JENSENMETALTECH.COM*	©2020 Jensen Precast- All rights reserved. All materials appearing as Jensen Precast documents and the like are proprietary work product and are protected under U.S. copyright and other laws. Unless in conjunction with business conducted with Jensen Precast, any use of Jensen Precast work product without express, written consent is prohibited, and recipient is prohibited from distributing any and all work product to non-approved third parties under penalty of civil action.	PART NUMBER & DESCRIPTION: 200041044 FAS-1466-AD2-R-LV-OH02 — REV: A
MATERIAL SURFACE: Smooth			WEIGHT: 38.56 Lbs — DRAWN BY: E. Massey — SHEET: 5
			CREATED: 6/26/2020 — MODIFIED: 7/13/2020

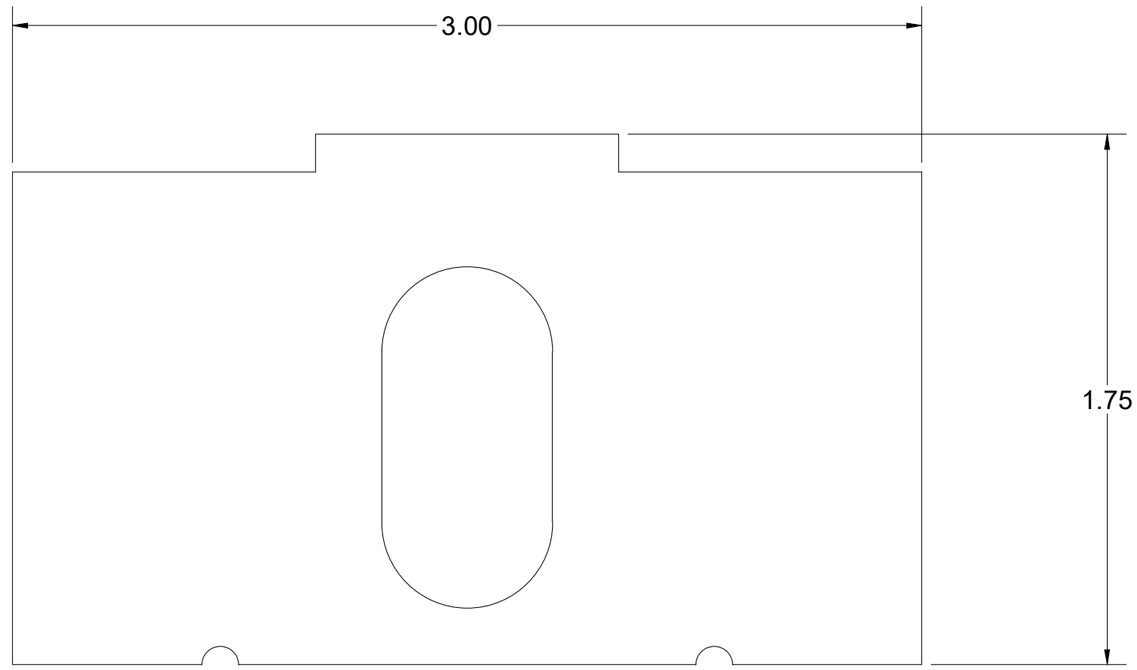

200041035.idw

BEND TABLE				MATERIAL IFS: 100007735			
BEND RADIUS	V-OPENING	BEND ANGLE	BEND DEDUCTION	MATERIAL THK: 0.25			
-	-	-	-	MAT DESCRIPTION: STL ASTM A36 SM-HRPO RAW .250			

JENSEN METALTECH
450 E. GLENDALE AVE. SPARKS. NV 89431
775-352-2716 FAX: 755-358-8127
JENSENMETALTECH.COM

©2020 Jensen Precast- All rights reserved.
All materials appearing as Jensen Precast documents and the like are proprietary work product and are protected under U.S. copyright and other laws.
Unless in conjunction with business conducted with Jensen Precast, any use of Jensen Precast work product without express, written consent is prohibited, and recipient is prohibited from distributing any and all work product to non-approved third parties under penalty of civil action.

NAME & DESCRIPTION:	200014354 Bolt Doubler		REV: C-1
WEIGHT: 0.314 lbmass		DRAWN BY: E. Massey	SHEET: 6 OF 12
CREATED: 12/12/2018		MODIFIED: 7/13/2020	

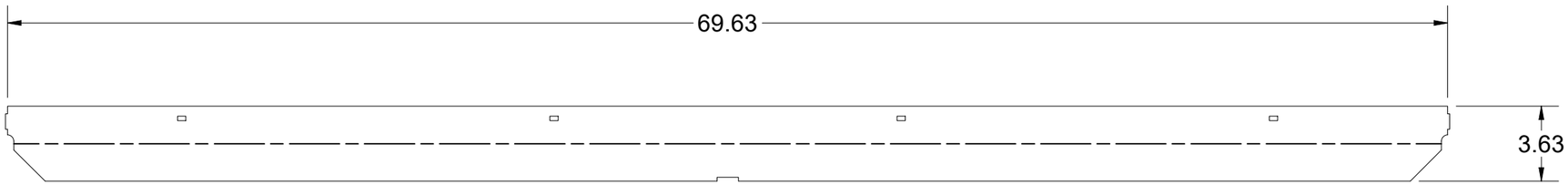

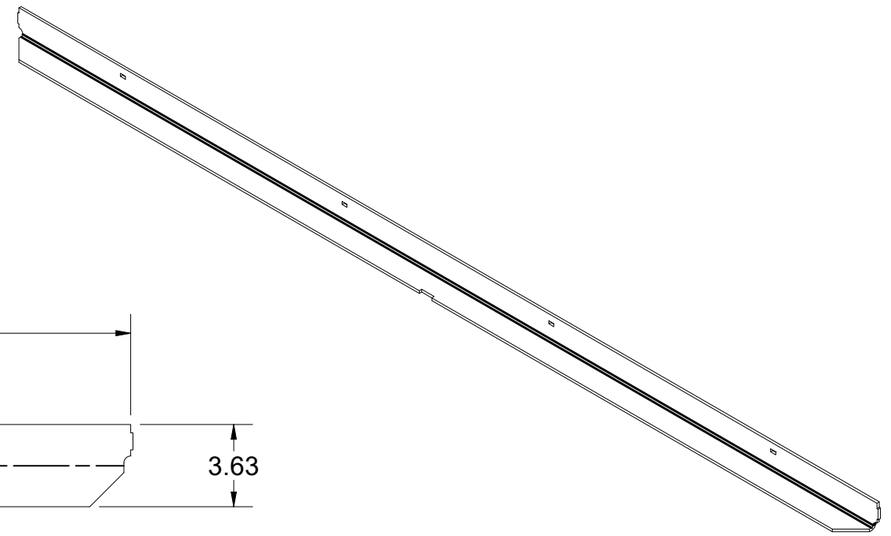

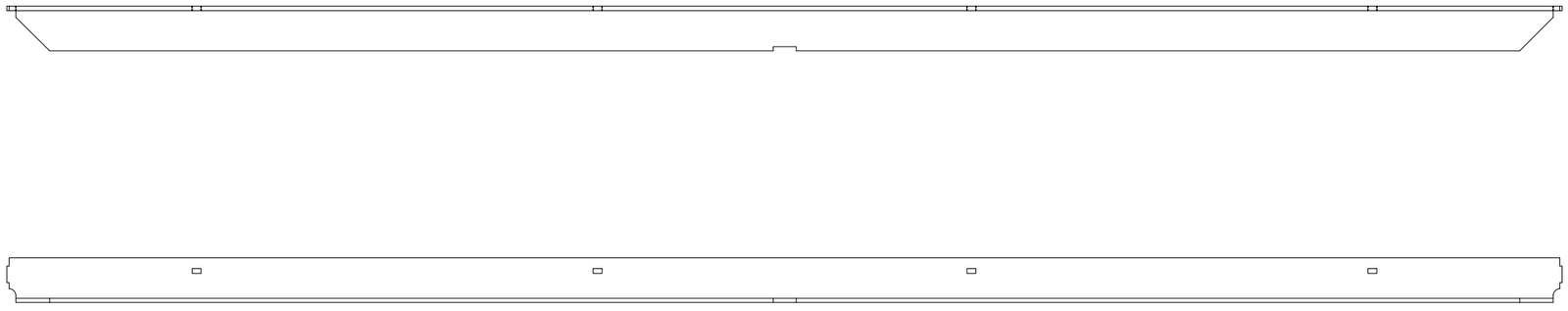

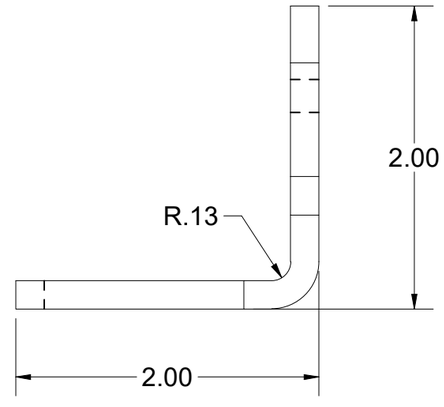

BEND TABLE			
BEND RADIUS	V-OPENING	BEND ANGLE	BEND DEDUCTION
0.125	2"	90	0.3750

MATERIAL IFS: 100007734

MATERIAL THK: 0.1875

MAT DESCRIPTION: STL ASTM A36 SM-HRPO 60X120 RAW .1875

JENSEN METALTECH
450 E. GLENDALE AVE. SPARKS. NV 89431
775-352-2716 FAX: 755-358-8127
JENSENMETALTECH.COM

©2020 Jensen Precast- All rights reserved.
All materials appearing as Jensen Precast documents and the like are proprietary work product and are protected under U.S. copyright and other laws.
Unless in conjunction with business conducted with Jensen Precast, any use of Jensen Precast work product without express, written consent is prohibited, and recipient is prohibited from distributing any and all work product to non-approved third parties under penalty of civil action.

NAME & DESCRIPTION: 200041041
Frame Component Steel Frame Side, Adjustable

REV: A

WEIGHT: 13.551 lbmass

DRAWN BY: E. Massey

CREATED: 6/26/2020

MODIFIED: 7/13/2020

SHEET: 7 OF 12

200041035.idw

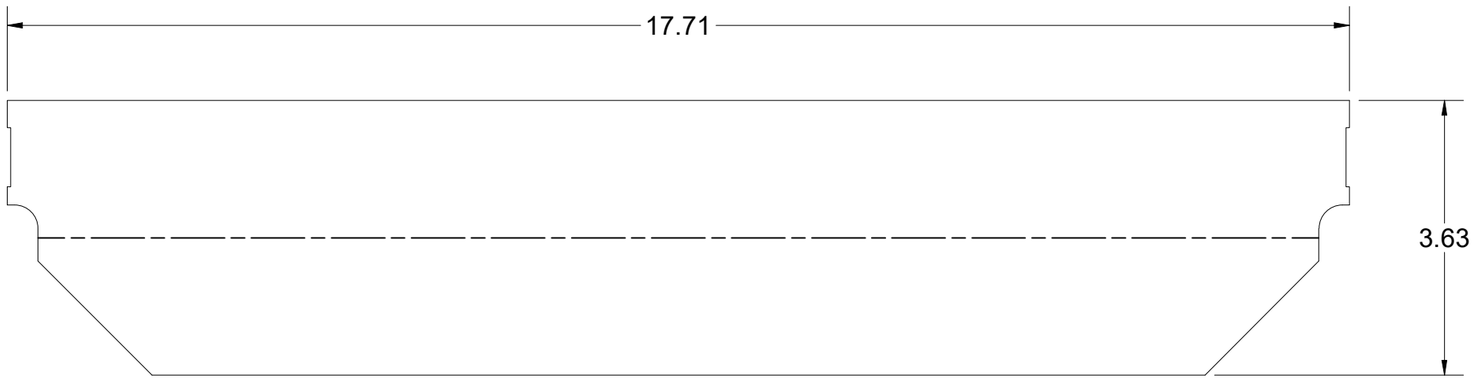

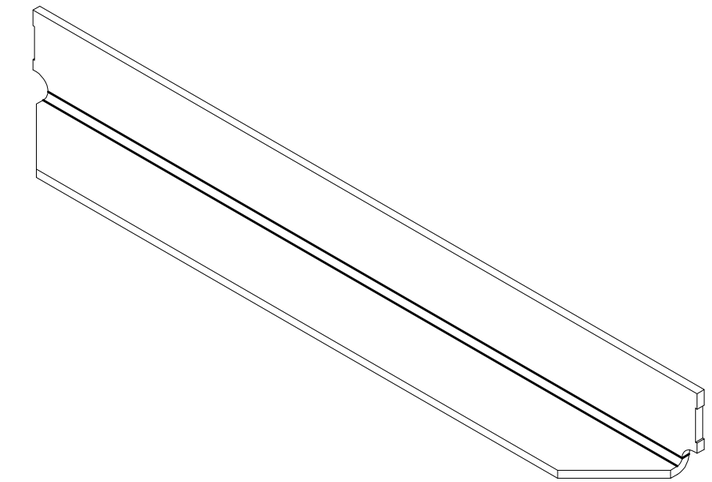

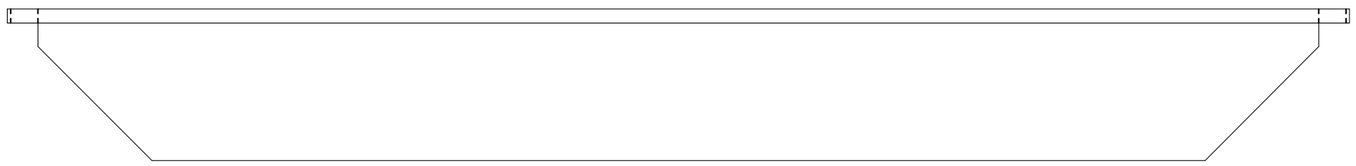

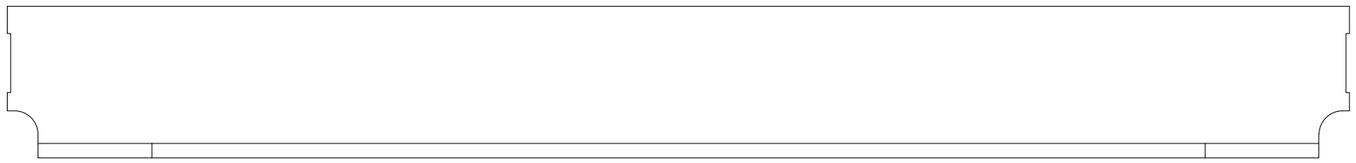

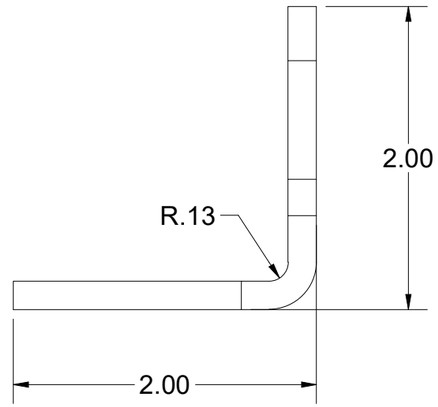

200041035.idw

BEND TABLE				MATERIAL IFS: 100007734
BEND RADIUS	V-OPENING	BEND ANGLE	BEND DEDUCTION	MATERIAL THK: 0.1875
0.125	2"	90	0.3750	MAT DESCRIPTION: STL ASTM A36 SM-HRPO 60X120 RAW .1875

JENSEN METALTECH
450 E. GLENDALE AVE. SPARKS. NV 89431
775-352-2716 FAX: 755-358-8127
JENSENMETALTECH.COM

©2020 Jensen Precast- All rights reserved.
All materials appearing as Jensen Precast documents and the like are proprietary work product and are protected under U.S. copyright and other laws.
Unless in conjunction with business conducted with Jensen Precast, any use of Jensen Precast work product without express, written consent is prohibited, and recipient is prohibited from distributing any and all work product to non-approved third parties under penalty of civil action.

NAME & DESCRIPTION:	200041045 Frame Component Steel Frame End, Adjustable		REV: A
WEIGHT: 3.281 lbmass		DRAWN BY: E. Massey	SHEET: 8 OF 12
CREATED: 6/26/2020		MODIFIED: 7/13/2020	

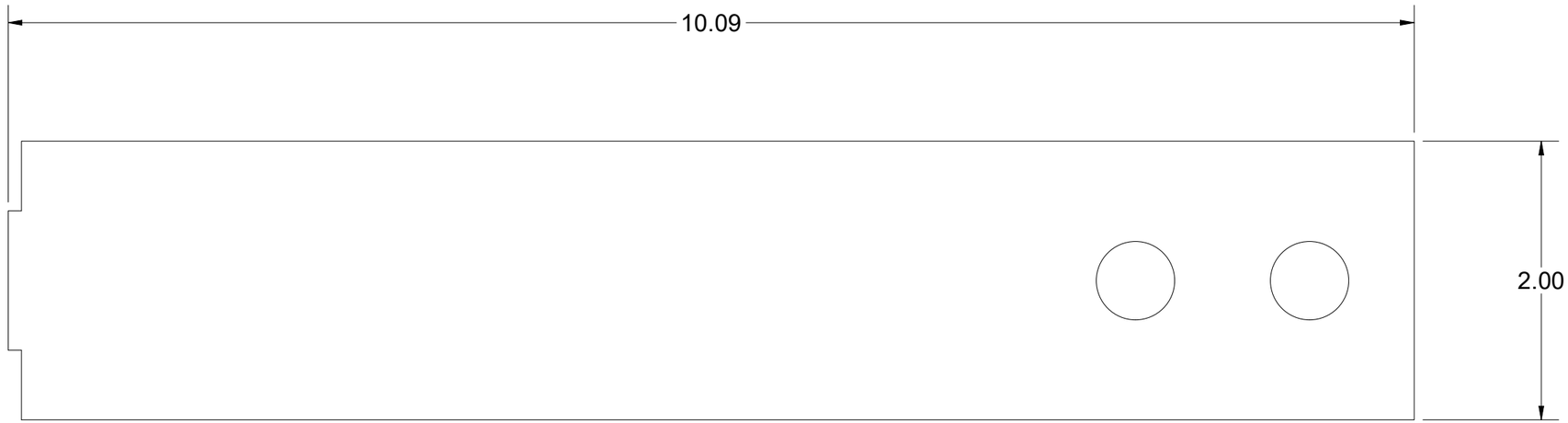

200041035.idw

BEND TABLE				MATERIAL IFS: 100007734
BEND RADIUS	V-OPENING	BEND ANGLE	BEND DEDUCTION	MATERIAL THK: 0.1875
-	-	-	-	MAT DESCRIPTION: STL ASTM A36 SM-HRPO 60X120 RAW .1875

JENSEN METALTECH
450 E. GLENDALE AVE. SPARKS. NV 89431
775-352-2716 FAX: 755-358-8127
JENSENMETALTECH.COM

©2020 Jensen Precast- All rights reserved.
All materials appearing as Jensen Precast documents and the like are proprietary work product and are protected under U.S. copyright and other laws.
Unless in conjunction with business conducted with Jensen Precast, any use of Jensen Precast work product without express, written consent is prohibited, and recipient is prohibited from distributing any and all work product to non-approved third parties under penalty of civil action.

NAME & DESCRIPTION:	200041047 ANCHOR STRAP		REV: A
WEIGHT: 1.042 lbmass	DRAWN BY: E. Massey		SHEET: 9 OF 12
CREATED: 6/26/2020	MODIFIED: 7/13/2020		

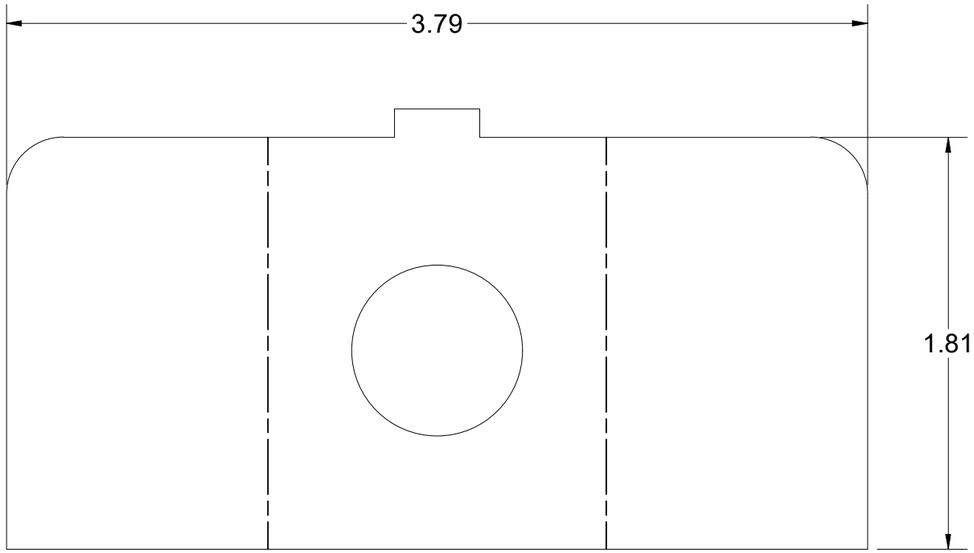

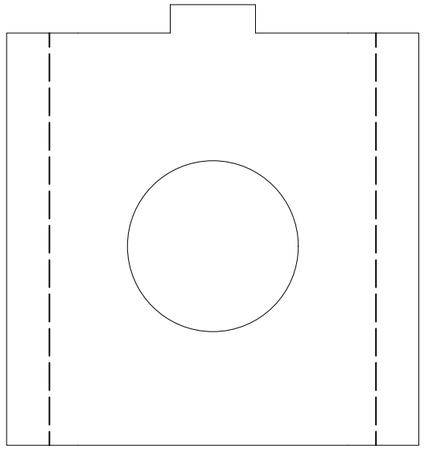

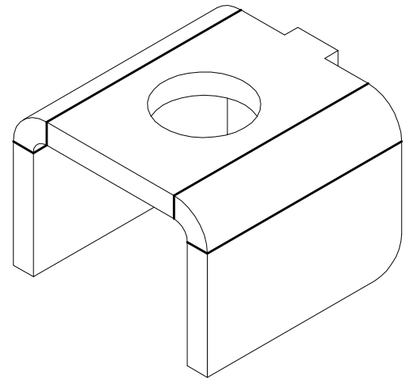

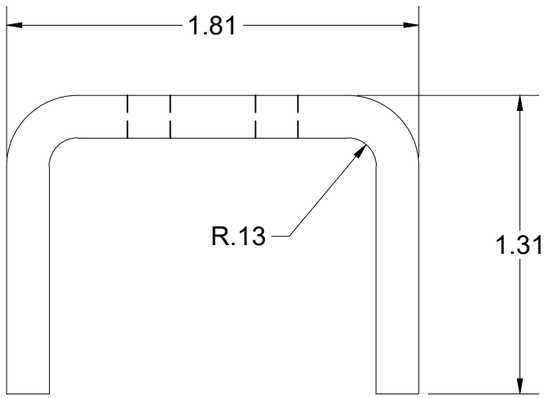

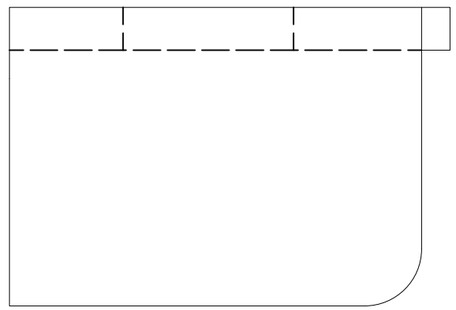

200041035.idw

BEND TABLE				MATERIAL IFS: 100007734
BEND RADIUS	V-OPENING	BEND ANGLE	BEND DEDUCTION	MATERIAL THK: 0.1875
0.125	1"	90	0.3250	MAT DESCRIPTION: STL ASTM A36 SM-HRPO 60X120 RAW .1875

JENSEN METALTECH
450 E. GLENDALE AVE. SPARKS. NV 89431
775-352-2716 FAX: 755-358-8127
JENSENMETALTECH.COM

©2020 Jensen Precast- All rights reserved. All materials appearing as Jensen Precast documents and the like are proprietary work product and are protected under U.S. copyright and other laws.
Unless in conjunction with business conducted with Jensen Precast, any use of Jensen Precast work product without express, written consent is prohibited, and recipient is prohibited from distributing any and all work product to non-approved third parties under penalty of civil action.

NAME & DESCRIPTION: 200041055 SPRING NUT BRACKET 1.3125" TALL		REV: A
WEIGHT: 0.351 lbmass	DRAWN BY: E. Massey	SHEET: 10 OF 12
CREATED: 9/19/2018	MODIFIED: 7/13/2020	

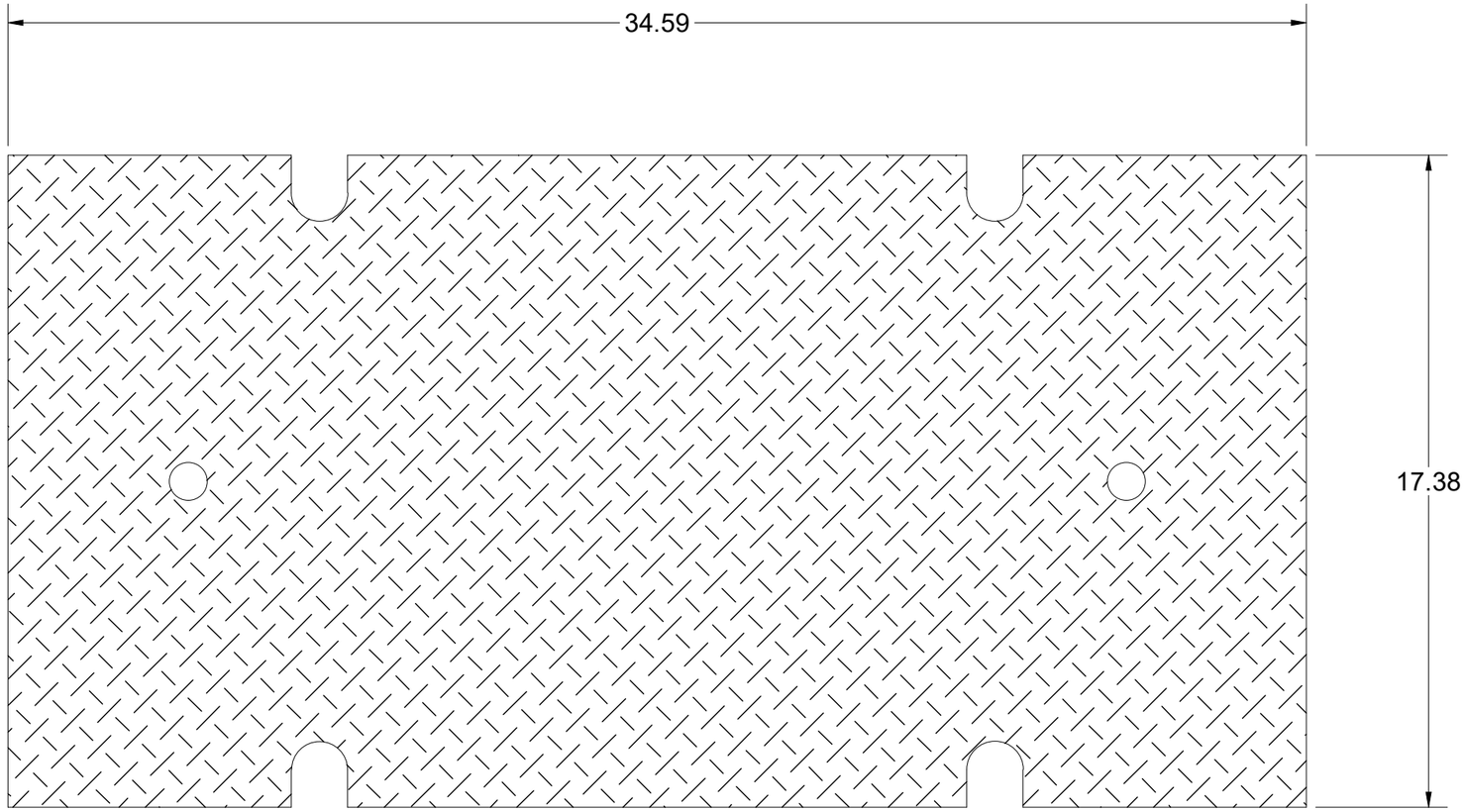

200041035.idw

BEND TABLE				MATERIAL IFS: 100007736
BEND RADIUS	V-OPENING	BEND ANGLE	BEND DEDUCTION	MATERIAL THK: 0.25
-	-	-	-	MAT DESCRIPTION: SHT STL CQ DP RAW .25

JENSEN METALTECH
450 E. GLENDALE AVE. SPARKS. NV 89431
775-352-2716 FAX: 755-358-8127
JENSENMETALTECH.COM

©2020 Jensen Precast- All rights reserved.
All materials appearing as Jensen Precast documents and the like are proprietary work product and are protected under U.S. copyright and other laws.
Unless in conjunction with business conducted with Jensen Precast, any use of Jensen Precast work product without express, written consent is prohibited, and recipient is prohibited from distributing any and all work product to non-approved third parties under penalty of civil action.

NAME & DESCRIPTION:	200041057 Door Component Steel Plate, Top		REV: A
WEIGHT:	46.135 lbmass	DRAWN BY: E. Massey	SHEET: 11 OF 12
CREATED:	6/26/2020	MODIFIED: 7/13/2020	

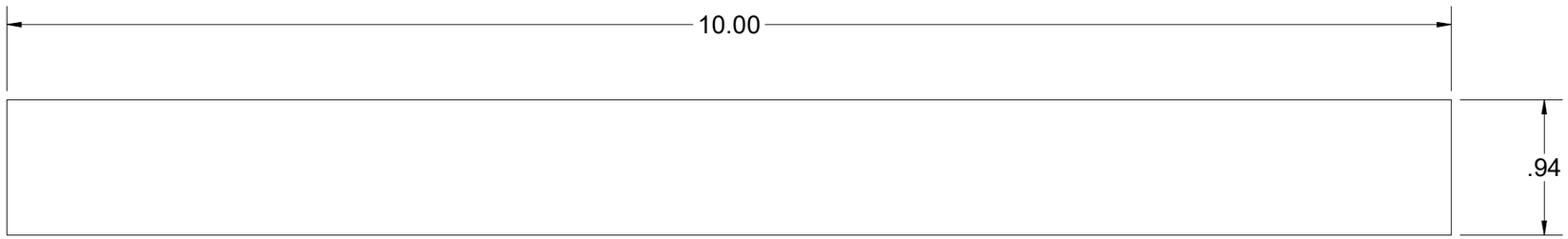

BEND TABLE				MATERIAL IFS: 100007734
BEND RADIUS	V-OPENING	BEND ANGLE	BEND DEDUCTION	MATERIAL THK: 0.1875
-	-	-	-	MAT DESCRIPTION: STL ASTM A36 SM-HRPO 60X120 RAW .1875

JENSEN METALTECH
450 E. GLENDALE AVE. SPARKS. NV 89431
775-352-2716 FAX: 755-358-8127
JENSENMETALTECH.COM

©2020 Jensen Precast- All rights reserved.
All materials appearing as Jensen Precast documents and the like are proprietary work product and are protected under U.S. copyright and other laws.
Unless in conjunction with business conducted with Jensen Precast, any use of Jensen Precast work product without express, written consent is prohibited, and recipient is prohibited from distributing any and all work product to non-approved third parties under penalty of civil action.

NAME & DESCRIPTION:		REV:
200041061 Door Component Steel Stiffener, Bar		A
WEIGHT: 0.499 lbmass	DRAWN BY: E. Massey	SHEET: 12 OF 12
CREATED: 6/26/2020	MODIFIED: 7/13/2020	