DESIGN NOTES
■ DESIGNED PER CALCS. #31635
■ ALL PARTS TO BE STENCILED: MFG DATE / PRODUCT ID / WEIGHT.

BILL OF MATERIALS

ITEM	UNIT QTY	QTY	PART NUMBER	DESCRIPTION	MASS (lb)
1	1	1	200048121	Vault Neck 4860x12 SDGE 3332	1736
2	1	1	100012877	Plug Cover 4860x8 Slab Top 30"C SDGE 3332	2011
3	1	1	100006919	CI COVER 30DIA NF R-1581-0153 ASTM A 48 CL35B BP B/D SDGE	202
4	1	4	100007016	BOLT HEX 5/8-11 UNC 1.625 304SS	
5	1	4	100008123	PLUG VN CONCRETE SLAB PLASTIC	
6	1	1	100008122	PLUG PICKHOLE NEOPRENE RUBBER CI COVER ED/LA	

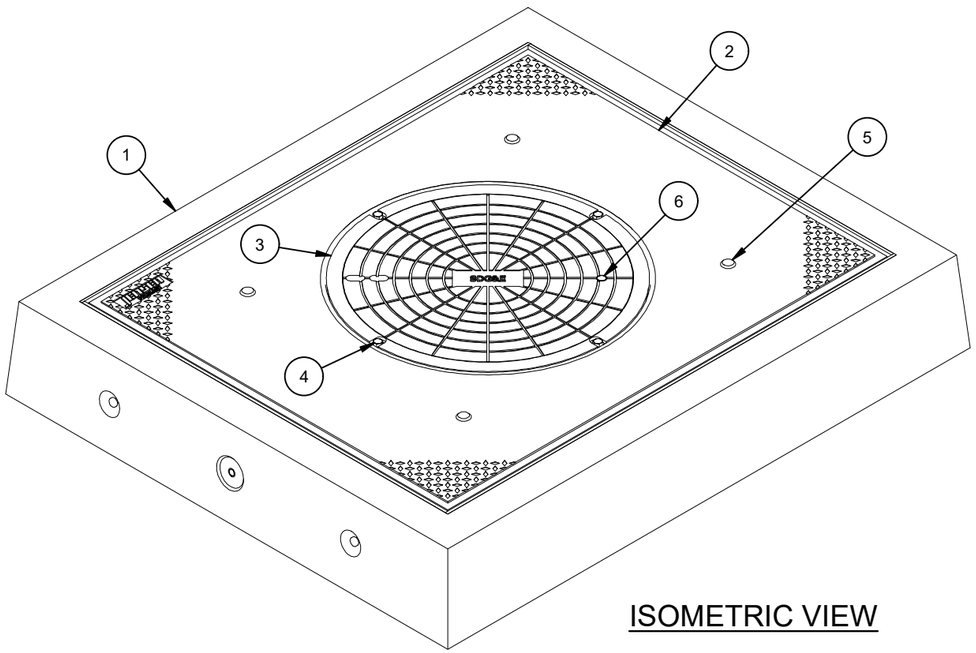

ISOMETRIC VIEW

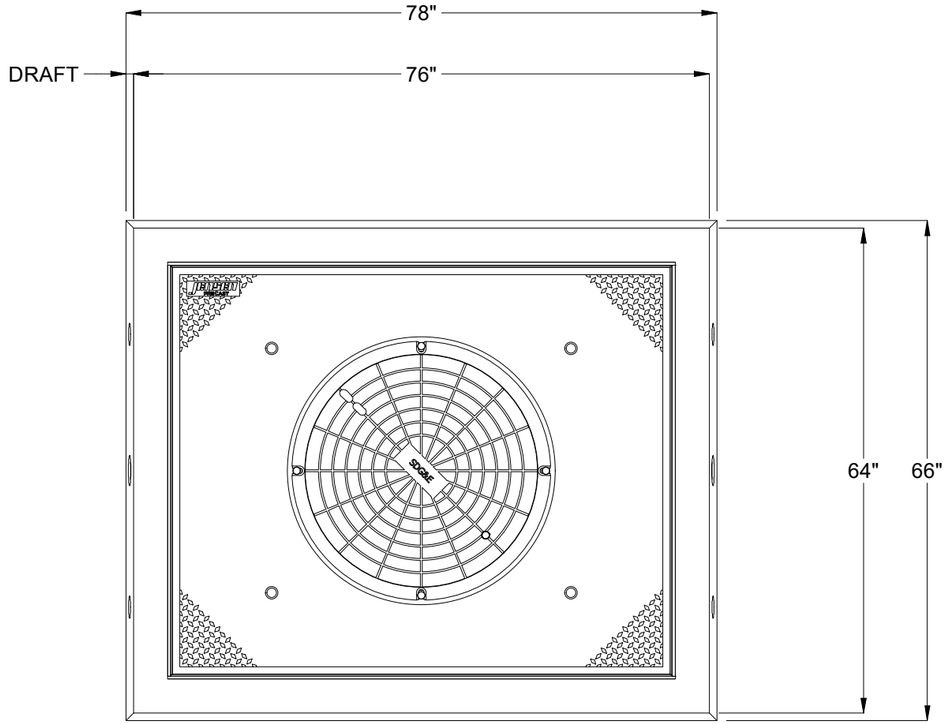

PLAN VIEW

LIFTING NOTES
■ THIS CONCRETE PRODUCT IS DESIGNED TO BE LIFTED AT 5500 PSI WITH 4 LIFT CONNECTIONS EQUALLY LOADED TO 4 LIFTING POINTS AT A MINIMUM 90° SLING ANGLE, MEASURED FROM HORIZONTAL.
*All rigging shall be design by a qualified professional. Loading diagrams show illustrations of possible rigging setups to achieve the required sling angle and load leg equalization. Other valid rigging configurations are possible. A qualified professional must be consulted prior to lifting.

RIGGING DIAGRAM*	E

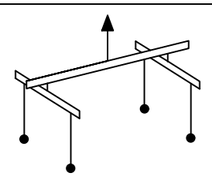

BURY DEPTH:	0.0' - 0.0' to Top		
WATER LEVEL:	3.0'	APPROX. WEIGHT:	3950.24 Lbs
DESIGN SPEC:	ACI 318,ASTM C857	LOADING SPEC:	A-16 (AASHTO HS20-44)
AGENCY:	SDGE	AGENCY SPEC:	3332

Infrastructure
JENSEN
WWW.JENSENPRECAST.COM

©2025 Jensen Infrastructure - All rights reserved.
All materials appearing as Jensen Infrastructure documents and the like are proprietary work product and are protected under U.S. copyright and other laws.
Unless in conjunction with business conducted with Jensen Infrastructure any use of Jensen Infrastructure work product without express, written consent is prohibited, and recipient is prohibited from distributing any and all work product to non-approved third parties under penalty of civil action. This product shall only be produced in a Jensen Infrastructure facility.

REVISION HISTORY			
REV	DESCRIPTION	DATE	APPROVED
C	UPDATED DRAWING	6/9/2025	

DESCRIPTION:	Vault Neck and Plug Cover Assembly 4860x12 30"C SDGE 3332 SALES ASSEMBLY		REV: C-1
PART NUMBER:	200040652	DRAWN BY: J. Prado	SHEET: 1 OF 1
CREATED:	6/15/2020	MODIFIED: 6/9/2025	

200040652.idw