NOTES
■ FOR COMPLETE DESIGN AND PRODUCT INFORMATION CONTACT JENSEN PRECAST.

BILL OF MATERIALS

ITEM	UNIT QTY	QTY	PART NUMBER	DESCRIPTION
1	107.623 ft^3	107.623 ft^3	100011427	CONCRETE MIX GENERIC 6000 PSI
2	1	1	200040716	REINFORCING MAT 200040716
3	1	1	200040717	REINFORCING MAT 200040717

ALTERNATE REINFORCING PART NUMBERS	
INNER	OUTER

200040648.idw

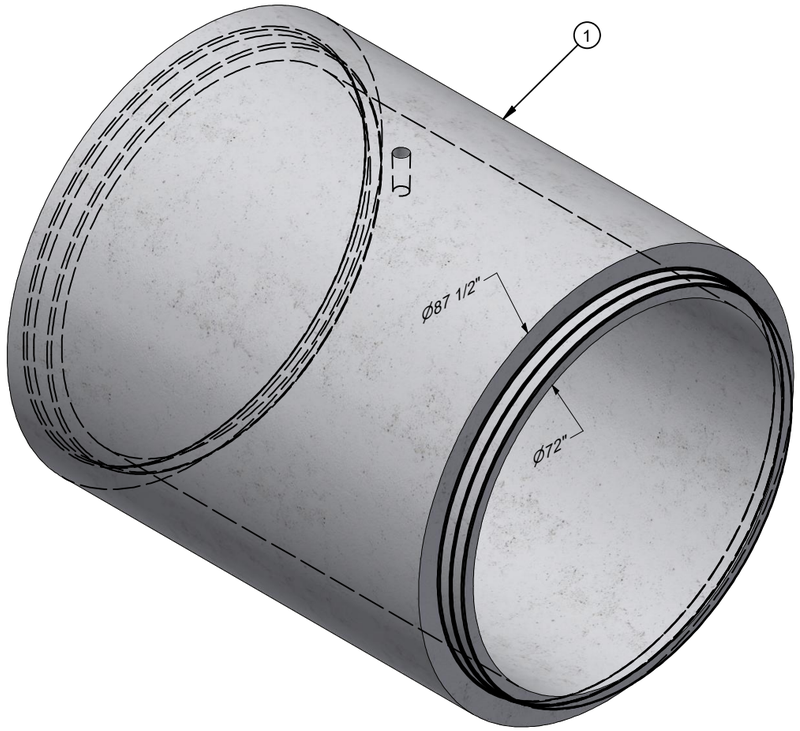

ISO REF

LIFTING NOTES
■ THIS CONCRETE PRODUCT IS DESIGNED TO BE LIFTED AT 6000PSI WITH 1 LIFT CONNECTIONS EQUALLY LOADED TO 1 LIFTING POINTS AT A MINIMUM 90° SLING ANGLE, MEASURED FROM HORIZONTAL.

BURY DEPTH:	to		
WATER LEVEL:	0.0'	APPROX. WEIGHT:	16174 Lbs
DESIGN SPEC:	ASTM C76	LOADING SPEC:	Class 5
REINFORCEMENT TYPE:	WWR Plain	LIFTING TYPE:	Teacup

JENSEN PRECAST EST. 1968

WWW.JENSENPRECAST.COM

©2024 Jensen Precast- All rights reserved.
All materials appearing as Jensen Precast documents and the like are proprietary work product and are protected under U.S. copyright and other laws.
Unless in conjunction with business conducted with Jensen Precast, any use of Jensen Precast work product without express, written consent is prohibited, and recipient is prohibited from distributing any and all work product to non-approved third parties under penalty of civil action.

REVISION HISTORY

REV	DESCRIPTION	DATE	BY
A	INITIAL RELEASE - 2005-19808-SNV	06/16/2020	DCH

DESCRIPTION:	RCP P72C Class 5 Bell - Spigot 96L CASTING LAYOUT			REV: A-1
PART NUMBER:	200040648	DRAWN BY:	D. Hughes	SHEET: 1 OF 2
CREATED:	6/15/2020	MODIFIED:	4/23/2024	

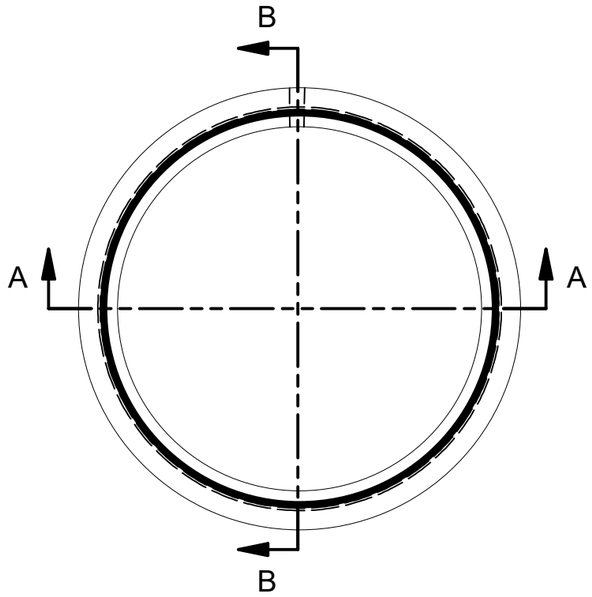

PLAN VIEW

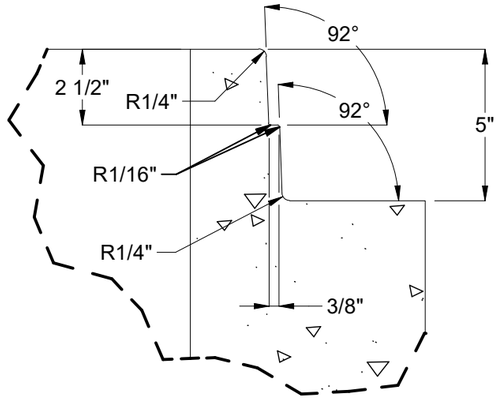

DETAIL A

SECTION A-A

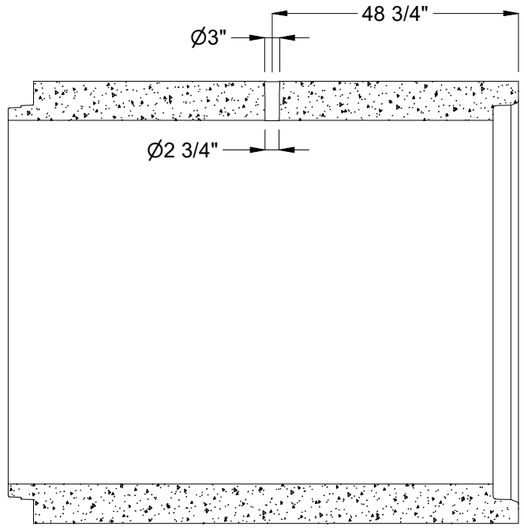

SECTION B-B

BURY DEPTH:	to		
WATER LEVEL:	0.0'	APPROX. WEIGHT:	16174 Lbs
DESIGN SPEC:	ASTM C76	LOADING SPEC:	Class 5
REINFORCEMENT TYPE:	WWR Plain	LIFTING TYPE:	Teacup

JENSEN PRECAST EST. 1968

WWW.JENSENPRECAST.COM

©2024 Jensen Precast- All rights reserved.
All materials appearing as Jensen Precast documents and the like are proprietary work product and are protected under U.S. copyright and other laws.
Unless in conjunction with business conducted with Jensen Precast, any use of Jensen Precast work product without express, written consent is prohibited, and recipient is prohibited from distributing any and all work product to non-approved third parties under penalty of civil action.

DESCRIPTION:	RCP P72C Class 5 Bell - Spigot 96L CASTING DRAWING		REV: A-1
PART NUMBER:	200040648	DRAWN BY:	D. Hughes
CREATED:	6/15/2020	MODIFIED:	4/23/2024
			SHEET: 2 OF 2

200040648.idw