NOTES
■ FOR COMPLETE DESIGN AND PRODUCT INFORMATION CONTACT JENSEN PRECAST.

BILL OF MATERIALS

ITEM	QTY	PART NUMBER	DESCRIPTION
1	54.104 ft^3	100002728	CONCRETE MIX GENERIC 4000 PSI
2	1	200039857	WWR REINFORCING CAGE 200039857
3	3	100004880	ANCHOR UTILITY .671DIA 5.625-SLAB GALV P75 6UA671

ALTERNATE REINFORCING OPTIONS

PART NUMBER	DESCRIPTION
300121873	BAR REINFORCING CAGE 300121873
200043386	MBK WIRE REINFORCING CAGE 200043386

200039858.idw

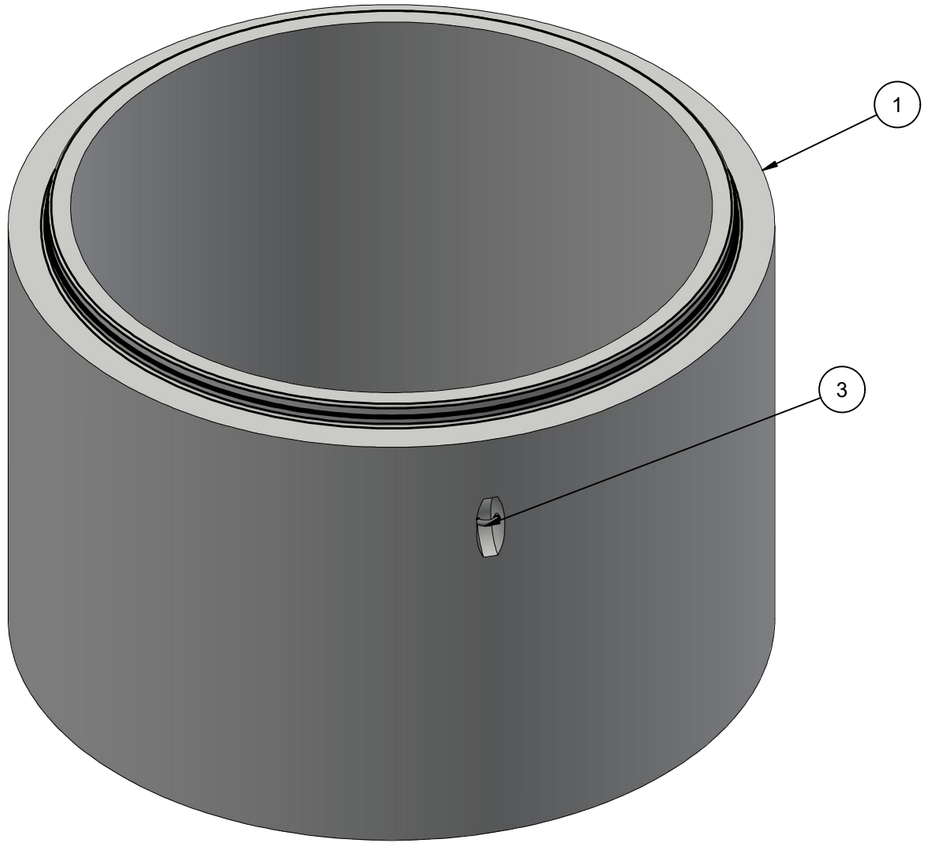

ISOMTERTIC VIEW

LIFTING NOTES
■ THIS CONCRETE PRODUCT IS DESIGNED TO BE LIFTED AT 2500 PSI WITH 3 LIFT CONNECTIONS EQUALLY LOADED TO 3 LIFTING POINTS AT A MINIMUM 90° SLING ANGLE, MEASURED FROM HORIZONTAL.

BURY DEPTH:	0.0' - 99.0' to Top of Section		
WATER LEVEL:	0.0'	WEIGHT:	8134.51 Lbs
DESIGN SPEC:	ASTM C478	LOADING SPEC:	A-16 (AASHTO HS20-44)
REINFORCEMENT TYPE:	WWR Plain	LIFTING TYPE:	A-Anchor

JENSEN PRECAST EST. 1968

WWW.JENSENPRECAST.COM

©2019 Jensen Precast- All rights reserved.
All materials appearing as Jensen Precast documents and the like are proprietary work product and are protected under U.S. copyright and other laws.
Unless in conjunction with business conducted with Jensen Precast, any use of Jensen Precast work product without express, written consent is prohibited, and recipient is prohibited from distributing any and all work product to non-approved third parties under penalty of civil action.

REVISION HISTORY

REV	DESCRIPTION	DATE	BY
A	INITIAL RELEASE	03/26/2019	MDD
B	CHANGED LIFTING TYPE TO V-ANCHORS	03/23/2021	VGL

DESCRIPTION:	Manhole D7286x54 Barrel TU CASTING LAYOUT		REV: B-3
PART NUMBER:	200039858	DRAWN BY: V. Lund	SHEET: 1 OF 2
CREATED:	2/12/2019	MODIFIED: 3/23/2021	

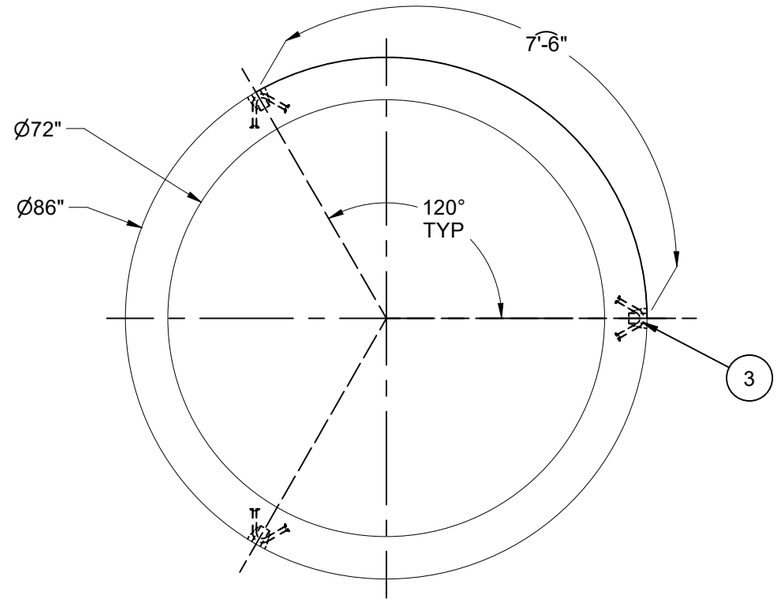

PLAN VIEW

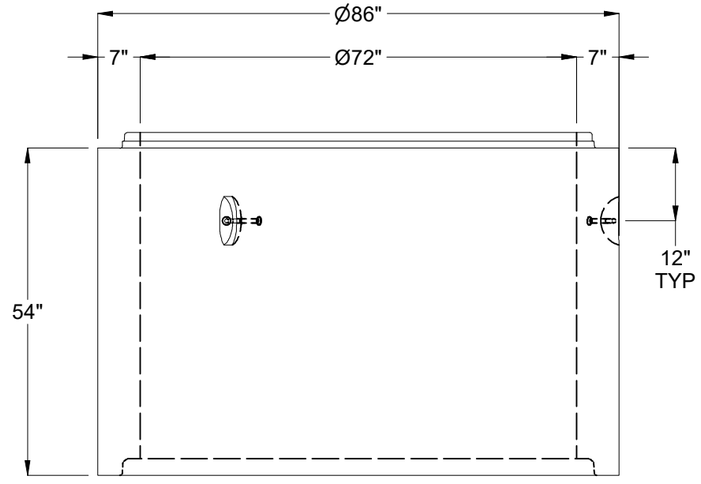

ELEVATION

BURY DEPTH:	0.0' - 99.0' to Top of Section		
WATER LEVEL:	0.0'	WEIGHT:	8134.51 Lbs
DESIGN SPEC:	ASTM C478	LOADING SPEC:	A-16 (AASHTO HS20-44)
REINFORCEMENT TYPE:	WWR Plain	LIFTING TYPE:	A-Anchor

JENSEN PRECAST EST. 1968

WWW.JENSENPRECAST.COM

©2019 Jensen Precast- All rights reserved.
All materials appearing as Jensen Precast documents and the like are proprietary work product and are protected under U.S. copyright and other laws.
Unless in conjunction with business conducted with Jensen Precast, any use of Jensen Precast work product without express, written consent is prohibited, and recipient is prohibited from distributing any and all work product to non-approved third parties under penalty of civil action.

DESCRIPTION:	Manhole D7286x54 Barrel TU CASTING DRAWING		REV: B-3
PART NUMBER:	200039858	DRAWN BY:	V. Lund
CREATED:	2/12/2019	MODIFIED:	3/23/2021
			SHEET: 2 OF 2

200039858.idw