NOTES
■ FOR COMPLETE DESIGN AND PRODUCT INFORMATION CONTACT JENSEN PRECAST.

BILL OF MATERIALS

ITEM	UNIT QTY	QTY	PART NUMBER	DESCRIPTION
1	4.745 ft^3	4.745 ft^3	100011427	CONCRETE MIX GENERIC 6000 PSI
2	11.697 ft^2	23.394 ft^2	100028208	WWR ROLL 2Vx8 W7.0xW3.0
3	1	1	100008604	RCP PE2945 Horizontal Class 4 Bell - Spigot 96L
4	1	1	100017438	RCP P36C Bell - Flared 15x72 97.75L

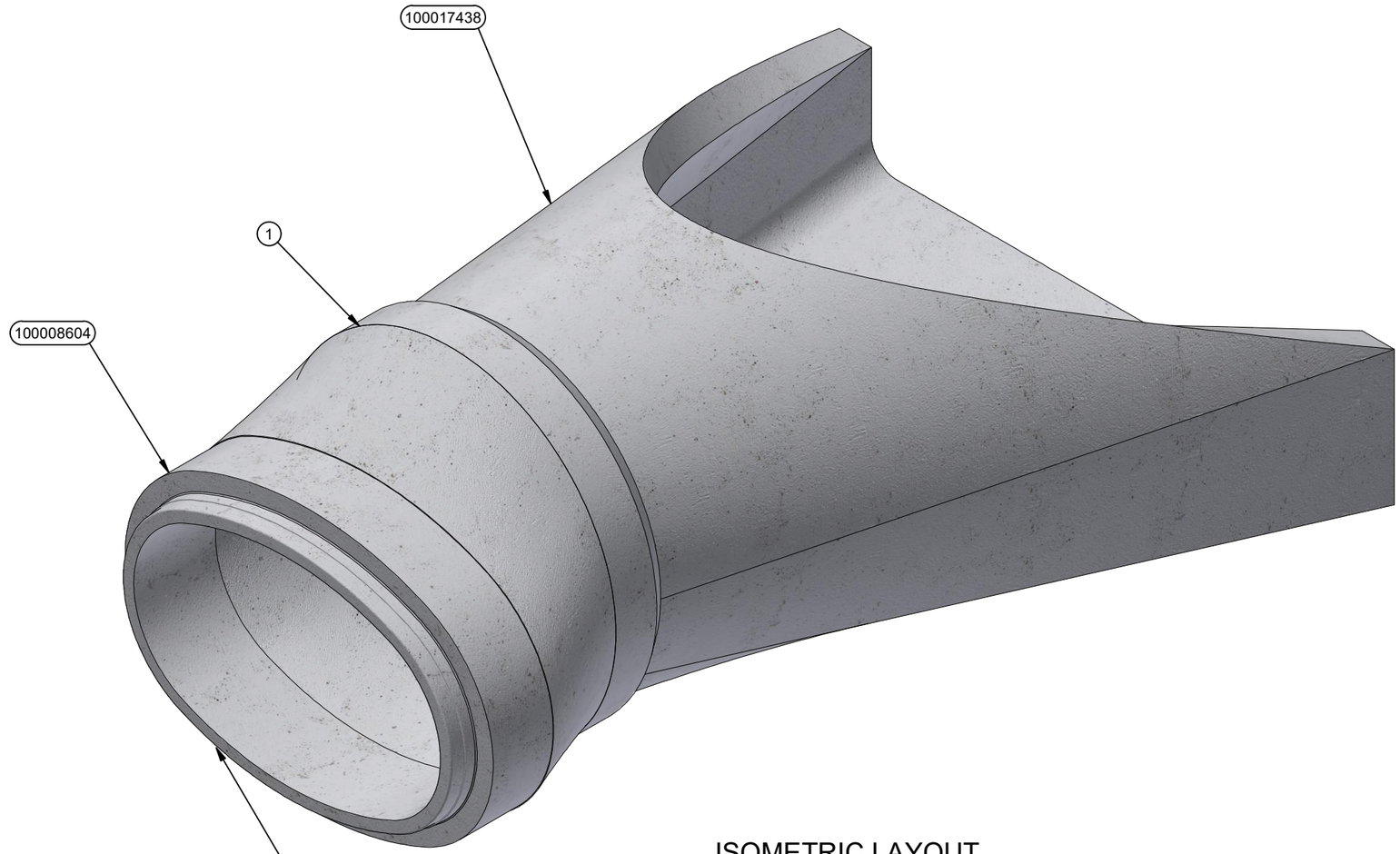

ISOMETRIC LAYOUT

REVISION HISTORY			
REV	DESCRIPTION	DATE	BY
A	INITIAL RELEASE		

BURY DEPTH:	to		
WATER LEVEL:	Below Structure	APPROX. WEIGHT:	6268.36 Lbs
DESIGN SPEC:	ASTM C507	LOADING SPEC:	
REINFORCEMENT TYPE:	WWR Plain	LIFTING TYPE:	None

JENSEN PRECAST EST. 1968

WWW.JENSENPRECAST.COM

©2020 Jensen Precast- All rights reserved.
All materials appearing as Jensen Precast documents and the like are proprietary work product and are protected under U.S. copyright and other laws.
Unless in conjunction with business conducted with Jensen Precast, any use of Jensen Precast work product without express, written consent is prohibited, and recipient is prohibited from distributing any and all work product to non-approved third parties under penalty of civil action.

DESCRIPTION:	RCP PE2945 Vertical Spigot - Flared 15x72 121.75L CASTING LAYOUT		REV: A
PART NUMBER:	200039541	DRAWN BY:	ACHO
CREATED:	5/18/2020	MODIFIED:	5/20/2020
			SHEET: 1 OF 2

200039541.idw

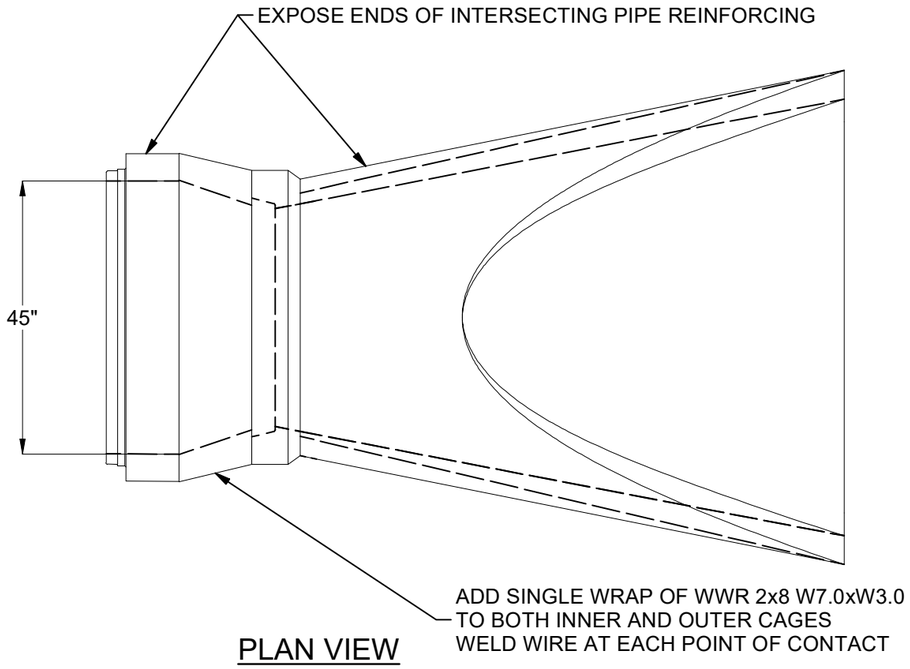

PLAN VIEW

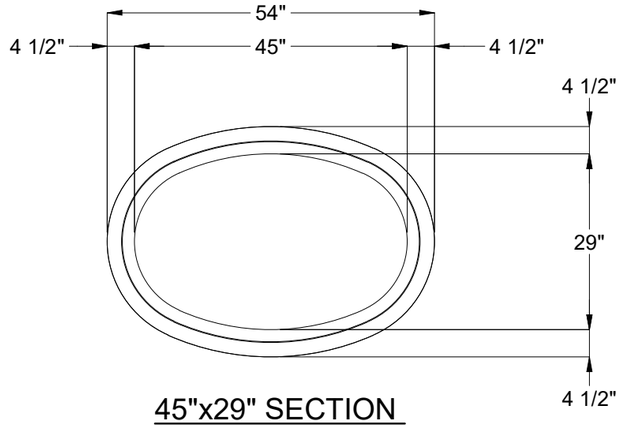

45"x29" SECTION

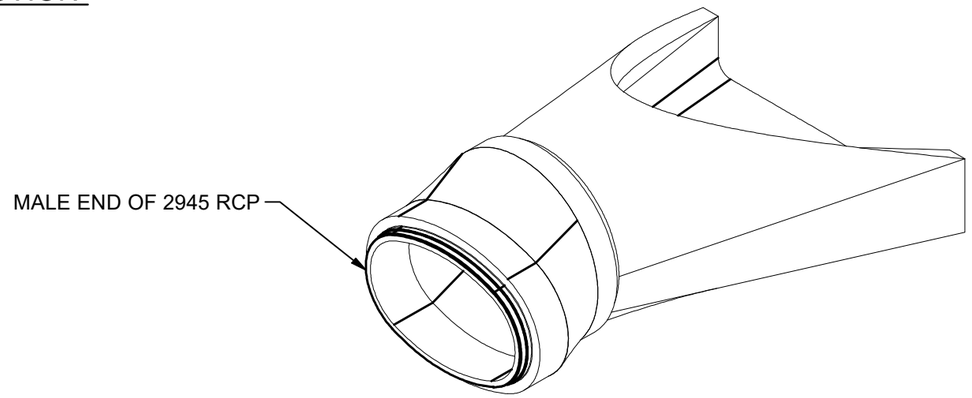

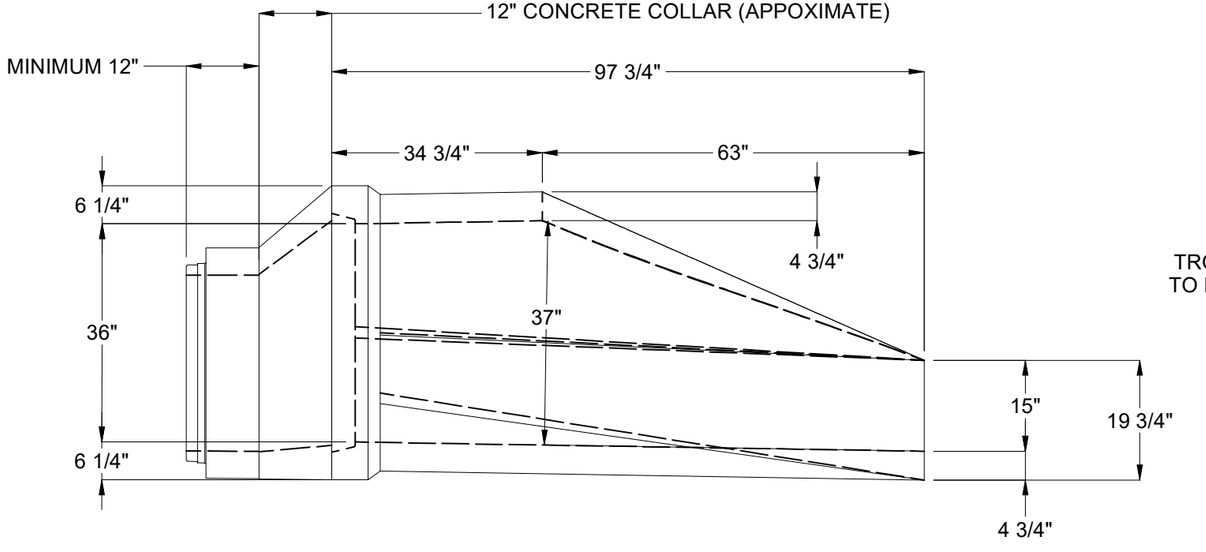

SIDE ELEVATION VIEW

ISOMETRIC LAYOUT

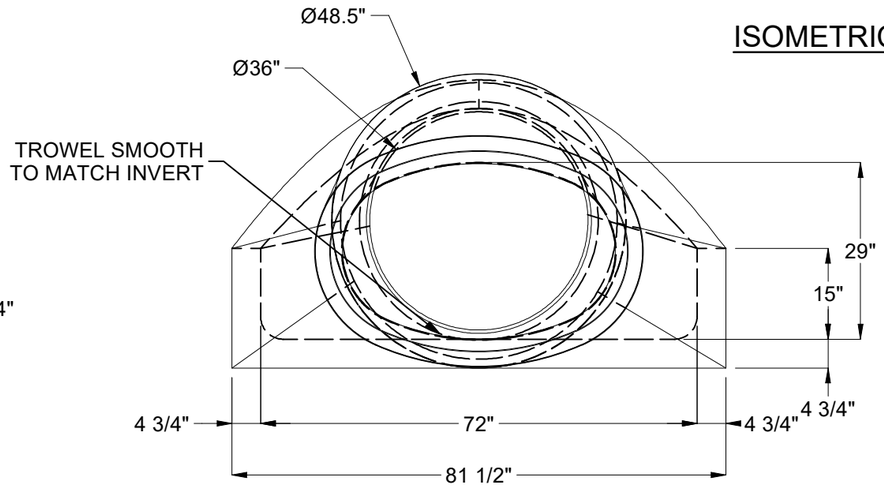

END ELEVAVION VIEW

BURY DEPTH:	to		
WATER LEVEL:	Below Structure	APPROX. WEIGHT:	6268.36 Lbs
DESIGN SPEC:	ASTM C507	LOADING SPEC:	
REINFORCEMENT TYPE:	WWR Plain	LIFTING TYPE:	None

JENSEN PRECAST EST. 1968

WWW.JENSENPRECAST.COM

©2020 Jensen Precast- All rights reserved.
All materials appearing as Jensen Precast documents and the like are proprietary work product and are protected under U.S. copyright and other laws.
Unless in conjunction with business conducted with Jensen Precast, any use of Jensen Precast work product without express, written consent is prohibited, and recipient is prohibited from distributing any and all work product to non-approved third parties under penalty of civil action.

DESCRIPTION:	RCP PE2945 Vertical Spigot - Flared 15x72 121.75L CASTING DRAWING		REV: A
PART NUMBER:	200039541	DRAWN BY:	ACHO
CREATED:	5/18/2020	MODIFIED:	5/20/2020
			SHEET: 2 OF 2

200039541.idw