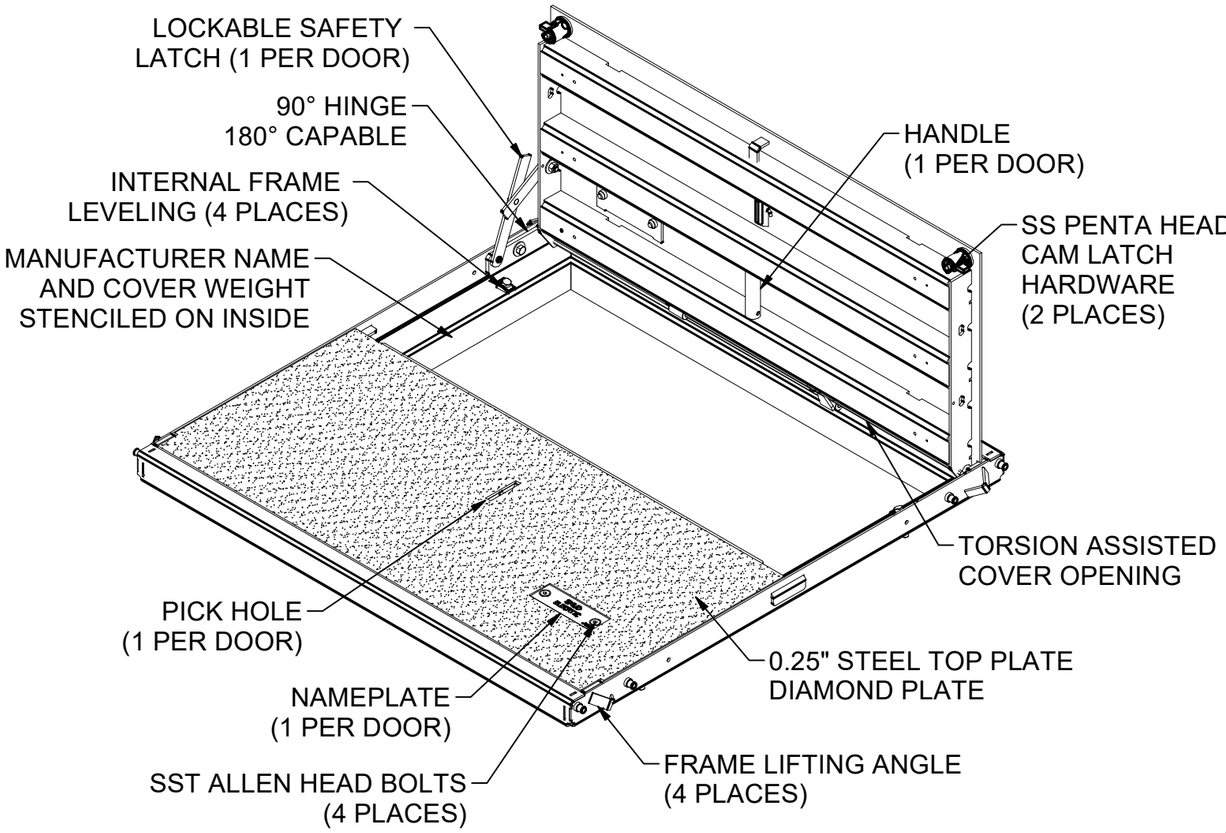


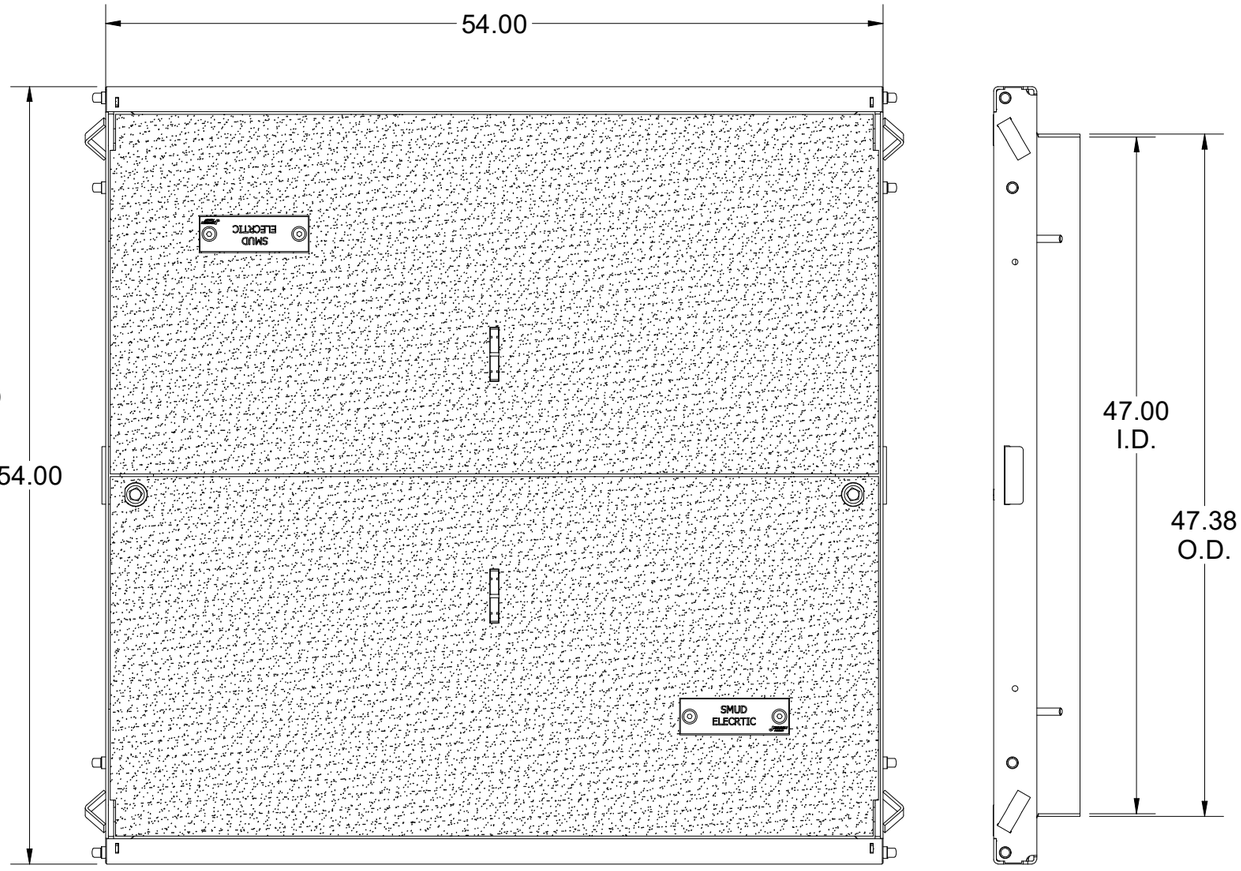


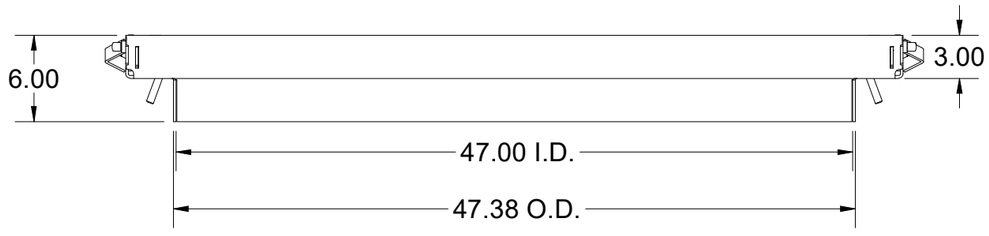


200037309.idw

ASTM C1802: Level 03

8,000 lb load on 10" x 10" footprint, without impact restricted to parking spaces accessible only to passenger vehicles and protected areas within close proximity of roadways.

| | | | |
|---|---|---|---|
| SURFACE: | TraxPlate™ | FINISH: | Galvanized |
| WEIGHT: | 513.87 lbs | MARKING: | As Noted |

JENSEN METALTECH
450 E. GLENDALE AVE. SPARKS. NV 89431
775-352-2716 FAX: 755-358-8127
JENSENMETALTECH.COM

©2020 Jensen Precast- All rights reserved. All materials appearing as Jensen Precast documents and the like are proprietary work product and are protected under U.S. copyright and other laws.
Unless in conjunction with business conducted with Jensen Precast, any use of Jensen Precast work product without express, written consent is prohibited, and recipient is prohibited from distributing any and all work product to non-approved third parties under penalty of civil action.

| | | | | |
|---|---|---|---|---|
| DESCRIPTION: | CAS2-4848-AH3-TRX-G-SAC-SMUD-OH06<br>48x48 Cover Assembly (ASTM Load Level 03, 2 Door, Steel, Hinged, TraxPlate™, Galvanized , N/A, SMUD) OH 06 | | | REV: |
| PART NUMBER: | 200037309 | DRAWN BY: | E. Massey | SHEET: 1 |
| CREATED: | 5/1/2018 | MODIFIED: | 4/2/2020 | |

# BILL OF MATERIALS

| ITEM | UNIT QTY | QTY | PART NUMBER | DESCRIPTION |
|---|---|---|---|---|
| 1 | 1 | 1 | 200037310 | DAS2-B-4848-H3-TRX-R-SAC-SMUD |
| 2 | 1 | 1 | 200037311 | DAS2-T-4848-H3-TRX-R-SAC-SMUD |
| 3 | 1 | 1 | 200037312 | FAS-4848-AH3-R-SAC-SMUD-OH06 |
| 4 | 1 | 4 | 100003823 | BOLT HEX 1/2-13 UNC 1.5 ZINC |
| 6 | 1 | 4 | 100005059 | BOLT HEX 1/2-13 UNC 2.5 ZINC |
| 7 | 1 | 4 | 100007872 | BOLT HEX SOCKET FLAT COUNTERSUNK HEAD 1/2-13 UNC 1 GR 5 SS |
| 8 | 1 | 4 | 100007869 | BOLT SHCS 1/2-13 X 1-3/4 SS |
| 9 | 1 | 8 | 100007873 | BOLT SHCS 3/8-16 X 1-1/4 PLATED |
| 10 | 1 | 2 | 100007876 | BOLT SHOULDER 3/8 X 1/2 WITH 5/16-18 THREADS GR 5 PLATED |
| 11 | 1 | 8 | 100007939 | CAP VINYL .467 X 1/2 |
| 12 | 1 | 2 | 100007918 | COTTER PIN 0.094DIA X 1-1/4 |
| 13 | 1 | 2 | 100007492 | HEX NUT NYLOCK 1/2-13 GR-5 ZINC-PLATED |
| 14 | 1 | 2 | 100007729 | HEX NUT SLOTTED CASTLE HEAD 1/2-13 SS |
| 15 | 1 | 2 | 100007655 | HINGE ASSY STL LEFT .375 |
| 16 | 1 | 2 | 100007656 | HINGE ASSY STL RIGHT .375 |
| 17 | 1 | 2 | 100007924 | LANYARD 3/64 W/PIN COATED SS |
| 19 | 1 | 2 | 100007857 | NUT FINGER 1/2-13 BRASS |
| 20 | 1 | 2 | 100007679 | OFFSET SPRING MOUNT .375 |
| 21 | 1 | 2 | 100007882 | RIVET GRIP STEEL 3/16 X 7/16 LRG HD |
| 22 | 1 | 8 | 100007859 | RIVET NUT 3/8-16 FLAT KNURLED |
| 23 | 1 | 2 | 100007933 | SAFETY LATCH ASSY FOR UNI AND 90 D HINGE |
| 24 | 1 | 2 | 100007915 | SPRING COMPRESSION 055 X 5/8 X 7/8 LONG |
| 25 | 1 | 2 | 100007669 | SPRING MOUNT ASSY .375 |
| 27 | 1 | 8 | 100011418 | WASHER FLAT 1/2 X 1 3/8 USS TYPE A ZINC |
| 33 | 1 | 4 | 100007725 | TORSION HEX ROD 3/8 X 36 RAW |
| 34 | 1 | 2 | 100007749 | BOLT PENTA 1/2-13 UNC 0.875 HEAD 2.5L SS DRILLED |
| 35 | 1 | 2 | 100005057 | NAME PLATE CAST ALUM - SMUD ELEC |

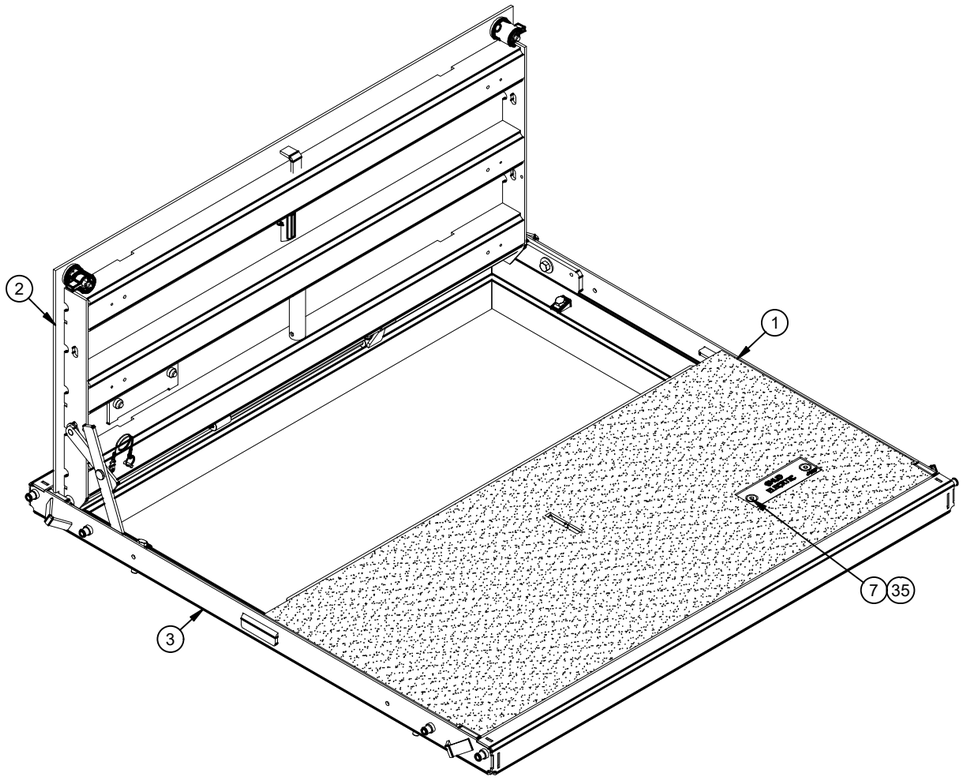


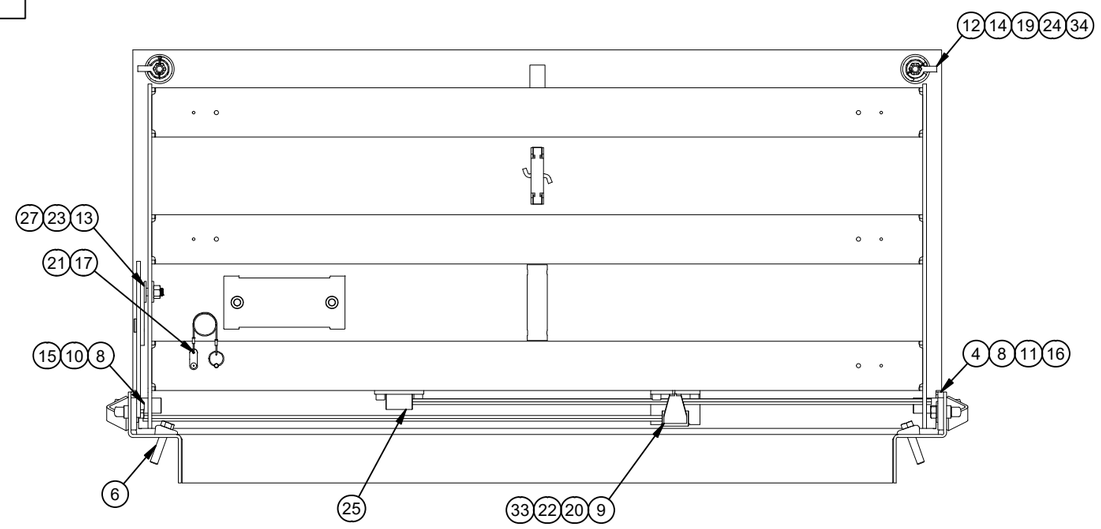


200037309.idw

| | | | |
|---|---|---|---|
| MATERIAL FINISH: Galvanized | JENSEN METALTECH<br>450 E. GLENDALE AVE. SPARKS. NV 89431<br>775-352-2716 FAX: 755-358-8127<br>*JENSENMETALTECH.COM* | ©2020 Jensen Precast- All rights reserved. All materials appearing as Jensen Precast documents and the like are proprietary work product and are protected under U.S. copyright and other laws. Unless in conjunction with business conducted with Jensen Precast, any use of Jensen Precast work product without express, written consent is prohibited, and recipient is prohibited from distributing any and all work product to non-approved third parties under penalty of civil action. | PART NUMBER & DESCRIPTION: 200037309<br>CAS2-4848-AH3-TRX-G-SAC-SMUD-OH06 |
| MATERIAL SURFACE: TraxPlate™ | | | WEIGHT: 513.87 Lbs<br>DRAWN BY: E. Massey<br>CREATED: 5/1/2018<br>MODIFIED: 4/2/2020 |

REV:

SHEET: 2

# BURN LIST - BOM

| PART NUMBER | ITEM QTY | DESCRIPTION | STOCK NUMBER | MATERIAL | MASS |
|---|---|---|---|---|---|
| 200013208 | 1 | Door Component Steel Lap Bar | 100007735 | STL ASTM A36 SM-HRPO RAW .250 | 7.099 lbmass |
| 200016406 | 2 | NAME PLATE BACKING PLATE SMUD | 100007735 | STL ASTM A36 SM-HRPO RAW .250 | 1.833 lbmass |
| 200037314 | 2 | Door Component Steel Channel | 100007735 | STL ASTM A36 SM-HRPO RAW .250 | 27.631 lbmass |
| 200037315 | 4 | Door Component Steel Channel | 100007735 | STL ASTM A36 SM-HRPO RAW .250 | 27.496 lbmass |
| 200037316 | 1 | Door Component Steel Plate, Bottom Nameplate | 100007735 | STL ASTM A36 SM-HRPO RAW .250 | 92.935 lbmass |
| 200037317 | 4 | Door Component Steel Side Bar | 100007735 | STL ASTM A36 SM-HRPO RAW .250 | 3.714 lbmass |
| 200037318 | 1 | Door Component Steel Plate, Top Nameplate | 100007735 | STL ASTM A36 SM-HRPO RAW .250 | 92.635 lbmass |
| 200037319 | 2 | Frame Component Steel Frame End, Adjustable | 100007734 | STL ASTM A36 SM-HRPO 60X120 RAW .1875 | 28.535 lbmass |
| 200037320 | 2 | Frame Component Steel Frame Side, Adjustable | 100007734 | STL ASTM A36 SM-HRPO 60X120 RAW .1875 | 24.092 lbmass |

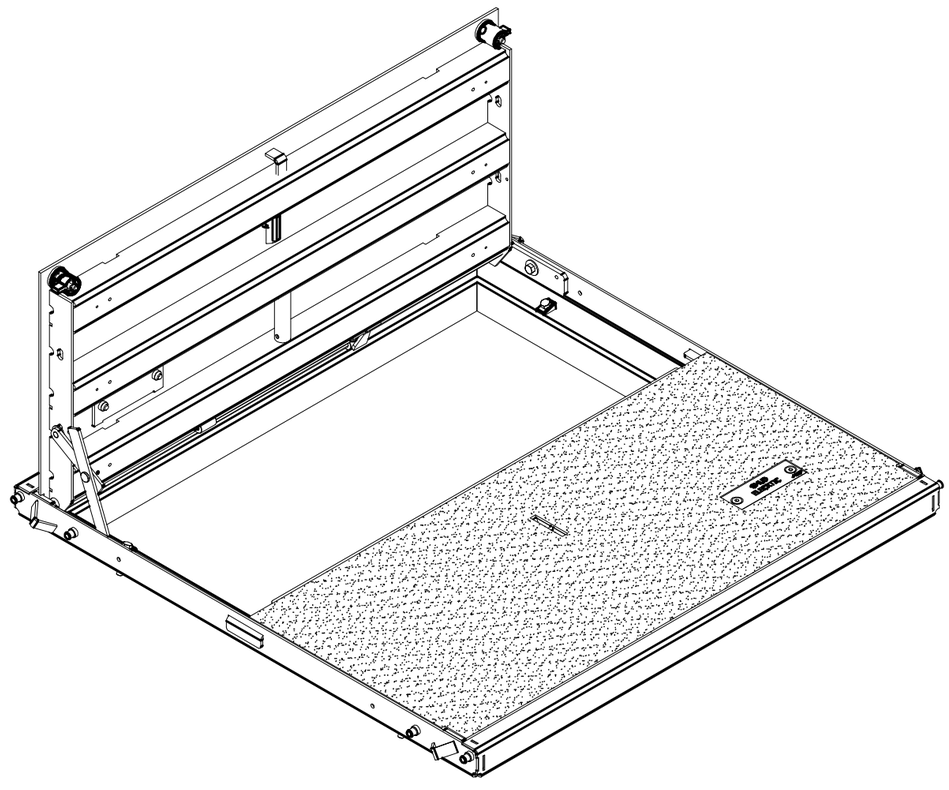

200037309.idw

MATERIAL FINISH: Galvanized

MATERIAL SURFACE: TraxPlate™

JENSEN METALTECH
450 E. GLENDALE AVE. SPARKS. NV 89431
775-352-2716 FAX: 755-358-8127
*JENSENMETALTECH.COM*

©2020 Jensen Precast- All rights reserved.
All materials appearing as Jensen Precast documents and the like are proprietary work product and are protected under U.S. copyright and other laws.
Unless in conjunction with business conducted with Jensen Precast, any use of Jensen Precast work product without express, written consent is prohibited, and recipient is prohibited from distributing any and all work product to non-approved third parties under penalty of civil action.

PART NUMBER & DESCRIPTION: 200037309
CAS2-4848-AH3-TRX-G-SAC-SMUD-OH06

REV:

WEIGHT: 513.87 Lbs

DRAWN BY: E. Massey

CREATED: 5/1/2018

MODIFIED: 4/2/2020

SHEET: 3

# CUT LIST - BOM

| PART NUMBER | ITEM QTY | BASE QTY | QTY | DESCRIPTION | Material IFS # | MATERIAL | MASS |
|---|---|---|---|---|---|---|---|
| 200037326 | 2 | 5.0000 in | 10.000 in | STRUCTURAL STEEL PIPE SCH 40 - 1 | 100003296 | Steel, Mild | 0.6864 lbmass |

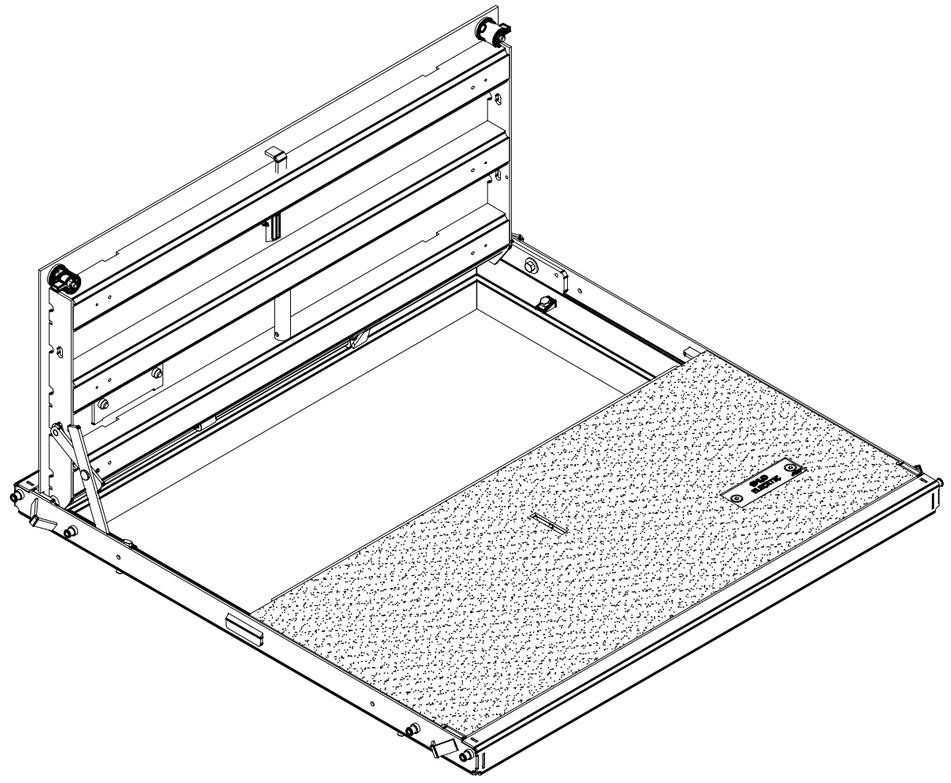

200037309.idw

| | | | | |
|---|---|---|---|---|
| MATERIAL FINISH: Galvanized | JENSEN METALTECH<br>450 E. GLENDALE AVE. SPARKS. NV 89431<br>775-352-2716 FAX: 755-358-8127<br>*JENSENMETALTECH.COM* | ©2020 Jensen Precast- All rights reserved. All materials appearing as Jensen Precast documents and the like are proprietary work product and are protected under U.S. copyright and other laws. Unless in conjunction with business conducted with Jensen Precast, any use of Jensen Precast work product without express, written consent is prohibited, and recipient is prohibited from distributing any and all work product to non-approved third parties under penalty of civil action. | PART NUMBER & DESCRIPTION: 200037309<br>CAS2-4848-AH3-TRX-G-SAC-SMUD-OH06 | REV: |
| MATERIAL SURFACE: TraxPlate™ | | | WEIGHT: 513.87 Lbs<br>CREATED: 5/1/2018 | DRAWN BY: E. Massey<br>MODIFIED: 4/2/2020 | SHEET: 4 |

# BILL OF MATERIALS

| ITEM | UNIT QTY | QTY | PART NUMBER | DESCRIPTION |
|---|---|---|---|---|
| 1 | 1 | 2 | 100007970 | CAM TOWER CAST STEEL |
| 2 | 1 | 1 | 100007916 | CLIP PICK HOLE SS |
| 3 | 1 | 1 | 200037314 | Door Component Steel Channel |
| 4 | 1 | 2 | 200037315 | Door Component Steel Channel |
| 5 | 1 | 1 | 200037318 | Door Component Steel Plate, Top Nameplate |
| 6 | 1 | 2 | 200037317 | Door Component Steel Side Bar |
| 7 | 1 | 1 | 100007697 | LIFT COVER STL |
| 8 | 1 | 1 | 100007647 | LIFTING BRACKET STEEL LEAF |
| 9 | 1 | 1 | 200016406 | NAME PLATE BACKING PLATE SMUD |
| 10 | 1 | 2 | 100007728 | NUT SELF-CLINCH 1/2-13 S-0813-1 RAW |
| 11 | 5.000 in | 5.000 in | 200037326 | STRUCTURAL STEEL PIPE SCH 40 - 1 |

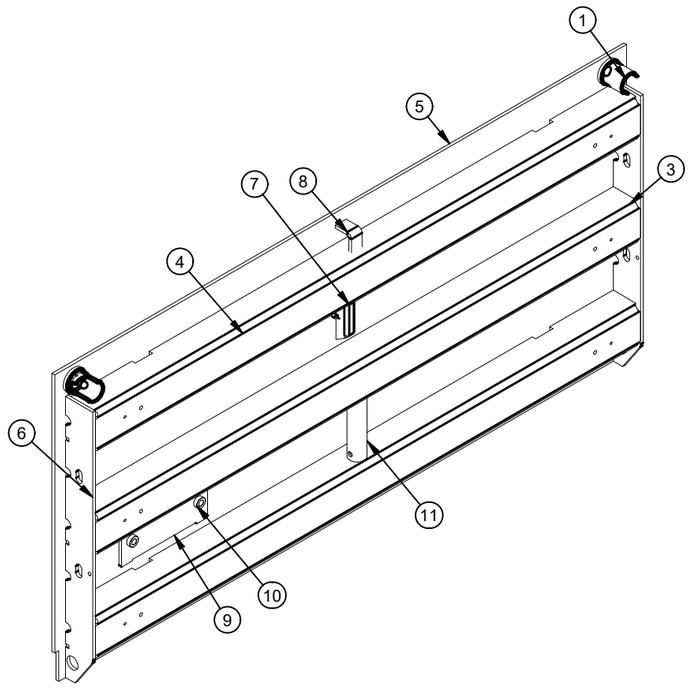


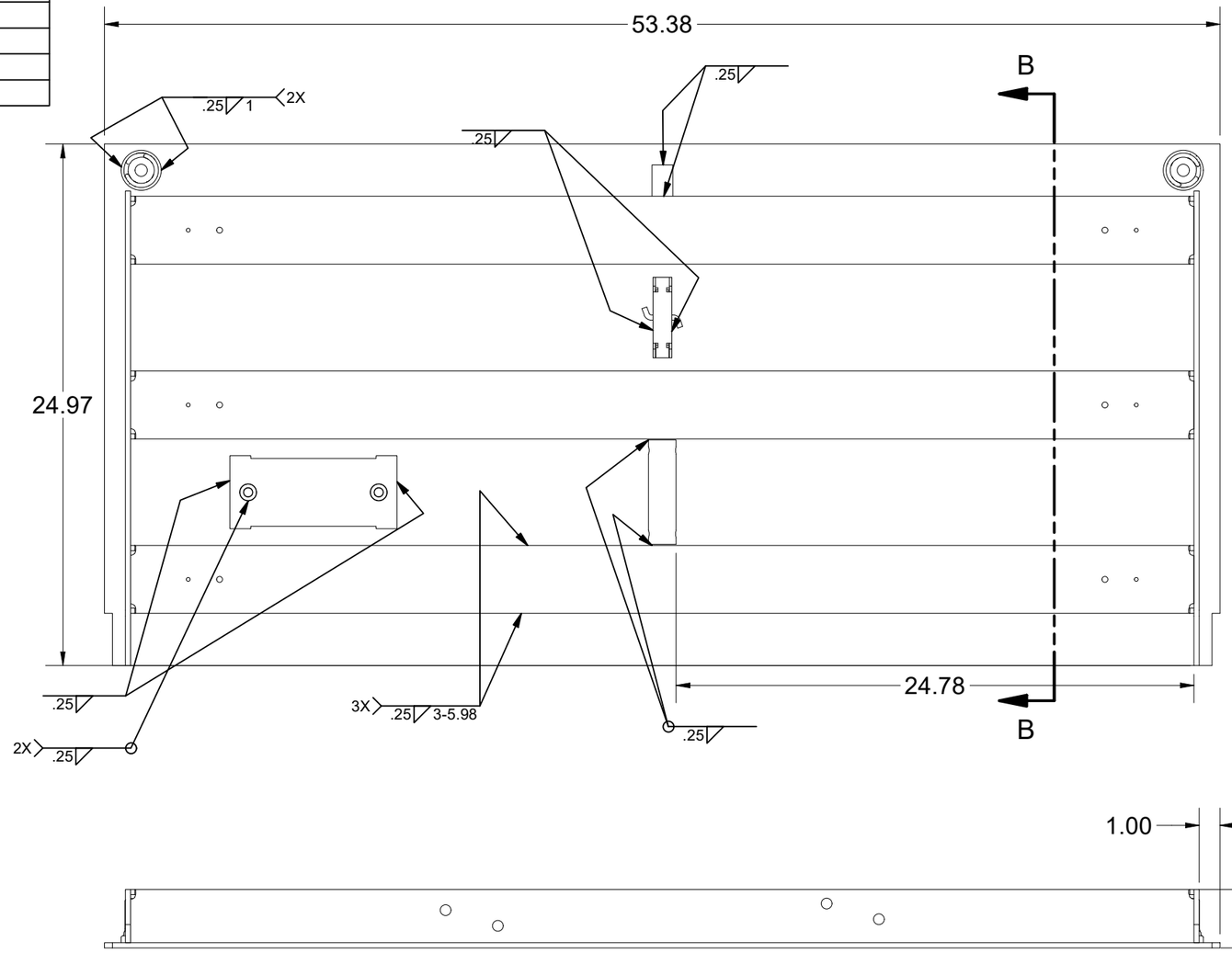


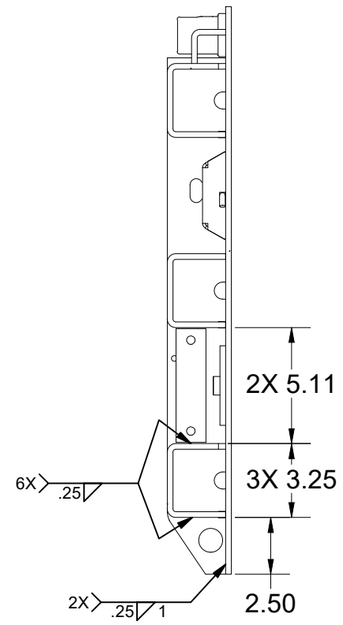


SECTION B-B

| | | | |
|---|---|---|---|
| MATERIAL FINISH: Raw | JENSEN METALTECH<br>450 E. GLENDALE AVE. SPARKS. NV 89431<br>775-352-2716 FAX: 755-358-8127<br>*JENSENMETALTECH.COM* | ©2020 Jensen Precast- All rights reserved. All materials appearing as Jensen Precast documents and the like are proprietary work product and are protected under U.S. copyright and other laws. Unless in conjunction with business conducted with Jensen Precast, any use of Jensen Precast work product without express, written consent is prohibited, and recipient is prohibited from distributing any and all work product to non-approved third parties under penalty of civil action. | PART NUMBER & DESCRIPTION: 200037311 DAS2-T-4848-H3-TRX-R-SAC-SMUD / REV: A |
| MATERIAL SURFACE: TraxPlate™ | | | WEIGHT: 187 Lbs / DRAWN BY: E. Massey / SHEET: 5 |
| | | | CREATED: 4/23/2018 / MODIFIED: 4/2/2020 |

200037309.idw

## BILL OF MATERIALS

| ITEM | UNIT QTY | QTY | PART NUMBER | DESCRIPTION |
|---|---|---|---|---|
| 1 | 1 | 1 | 100007916 | CLIP PICK HOLE SS |
| 2 | 1 | 1 | 200037314 | Door Component Steel Channel |
| 3 | 1 | 2 | 200037315 | Door Component Steel Channel |
| 4 | 1 | 1 | 200013208 | Door Component Steel Lap Bar |
| 5 | 1 | 1 | 200037316 | Door Component Steel Plate, Bottom Nameplate |
| 6 | 1 | 2 | 200037317 | Door Component Steel Side Bar |
| 7 | 1 | 1 | 100007697 | LIFT COVER STL |
| 8 | 1 | 1 | 100007647 | LIFTING BRACKET STEEL LEAF |
| 9 | 1 | 1 | 200016406 | NAME PLATE BACKING PLATE SMUD |
| 10 | 1 | 2 | 100007728 | NUT SELF-CLINCH 1/2-13 S-0813-1 RAW |
| 11 | 5.000 in | 5.000 in | 200037326 | STRUCTURAL STEEL PIPE SCH 40 - 1 |

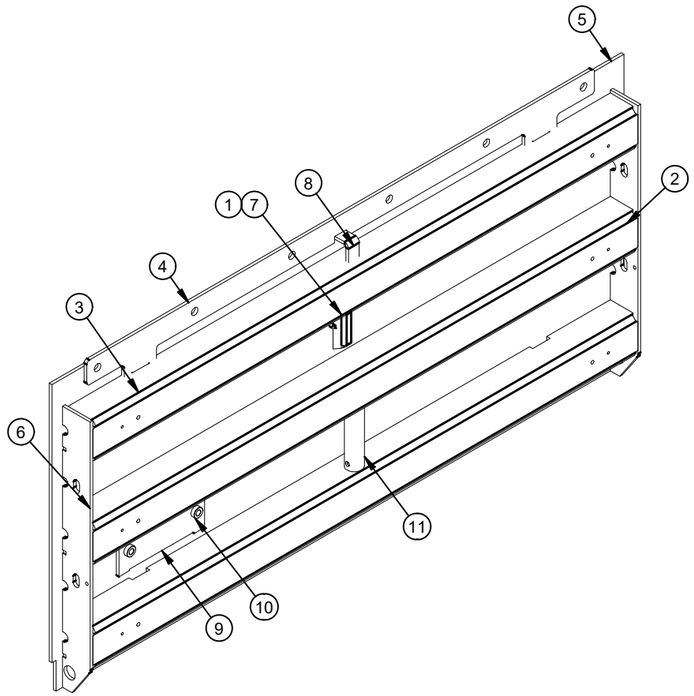


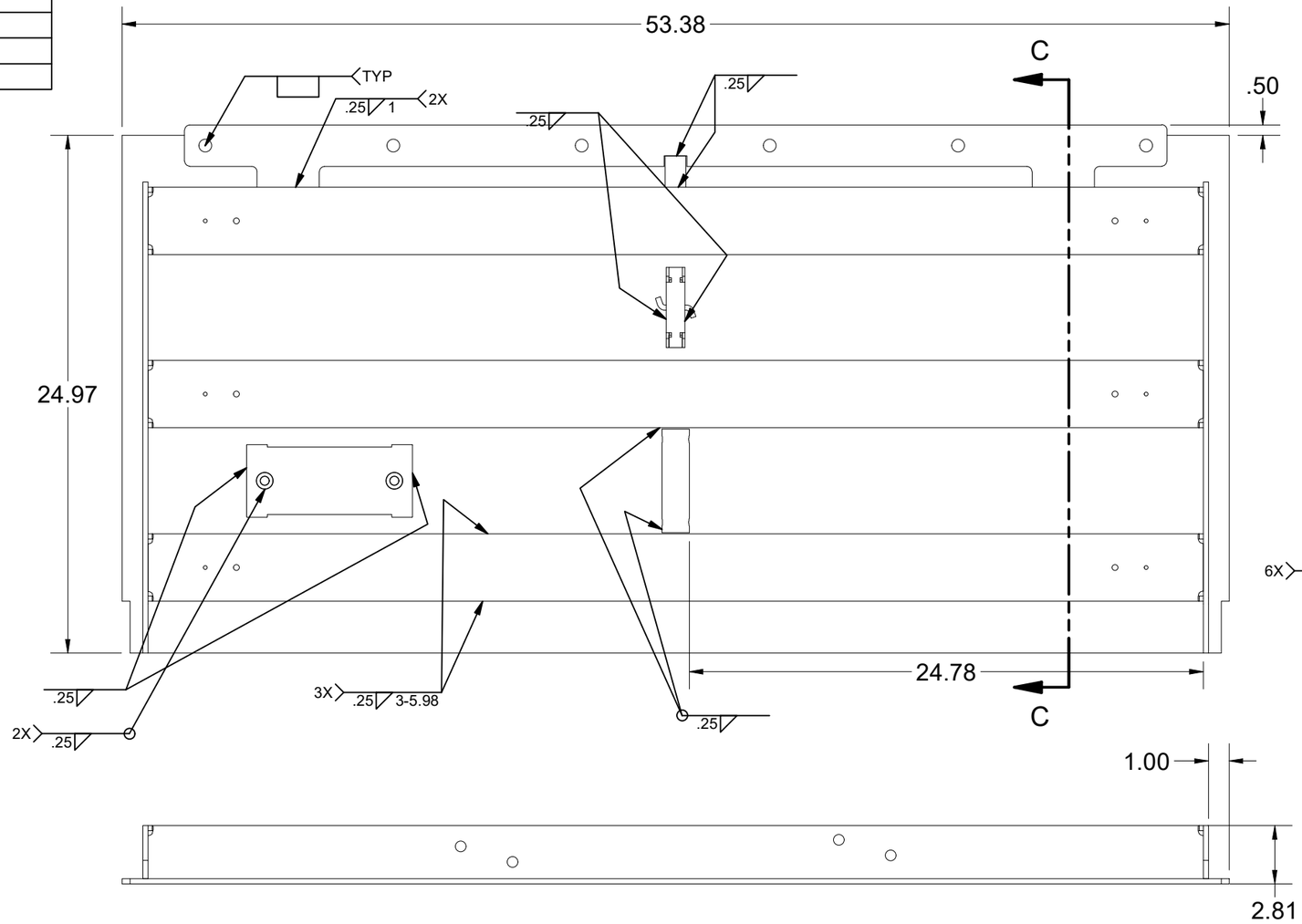


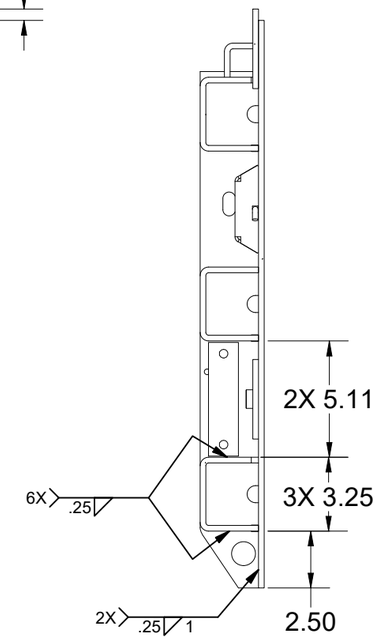


SECTION C-C

200037309.idw

| | | | |
|---|---|---|---|
| MATERIAL FINISH: Raw | JENSEN METALTECH<br>450 E. GLENDALE AVE. SPARKS. NV 89431<br>775-352-2716 FAX: 755-358-8127<br>*JENSENMETALTECH.COM* | ©2020 Jensen Precast- All rights reserved. All materials appearing as Jensen Precast documents and the like are proprietary work product and are protected under U.S. copyright and other laws. Unless in conjunction with business conducted with Jensen Precast, any use of Jensen Precast work product without express, written consent is prohibited, and recipient is prohibited from distributing any and all work product to non-approved third parties under penalty of civil action. | PART NUMBER & DESCRIPTION: 200037310 DAS2-B-4848-H3-TRX-R-SAC-SMUD / REV: A |
| MATERIAL SURFACE: TraxPlate™ | | | WEIGHT: 193.18 Lbs / DRAWN BY: E. Massey / SHEET: 6 |
| | | | CREATED: 4/23/2018 / MODIFIED: 4/2/2020 |

## BILL OF MATERIALS

| ITEM | UNIT QTY | QTY | PART NUMBER | DESCRIPTION |
|---|---|---|---|---|
| 1 | 1 | 4 | 200018691 | FRAME BOLT DOUBLER SLOT |
| 2 | 1 | 2 | 100007636 | FRAME LATCH ANGLE - A36 - 4IN LONG |
| 3 | 1 | 4 | 100007641 | FRAME LIFTING BRACKET |
| 4 | 1 | 2 | 200037319 | Frame Component Steel Frame End, Adjustable |
| 5 | 1 | 2 | 200037320 | Frame Component Steel Frame Side, Adjustable |
| 6 | 1 | 4 | 100007863 | NUT LEVELER 1/2-13 WELDABLE CAST STEEL |
| 7 | 1 | 8 | 100007728 | NUT SELF-CLINCH 1/2-13 S-0813-1 RAW |

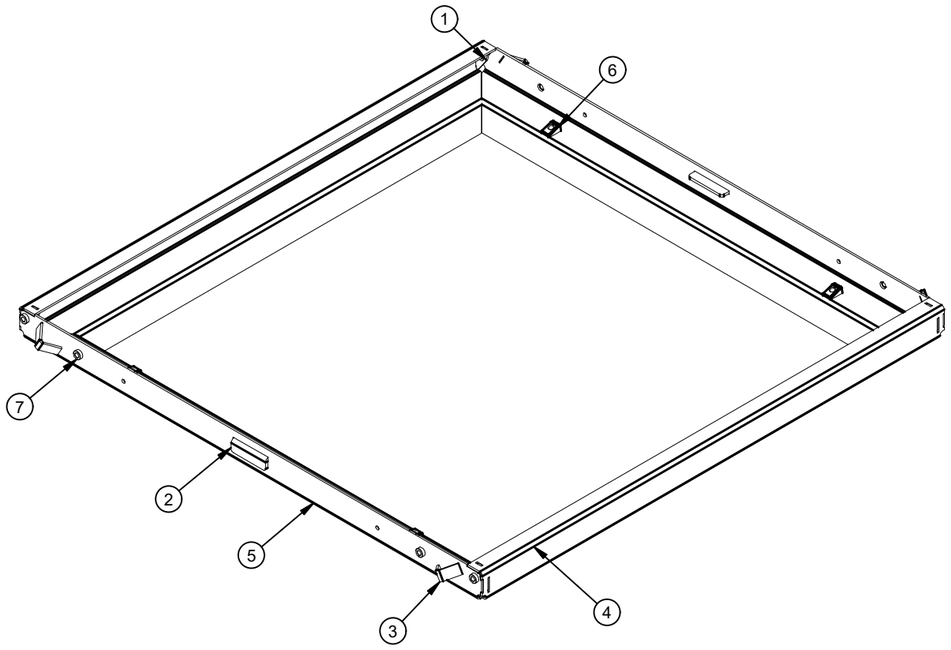


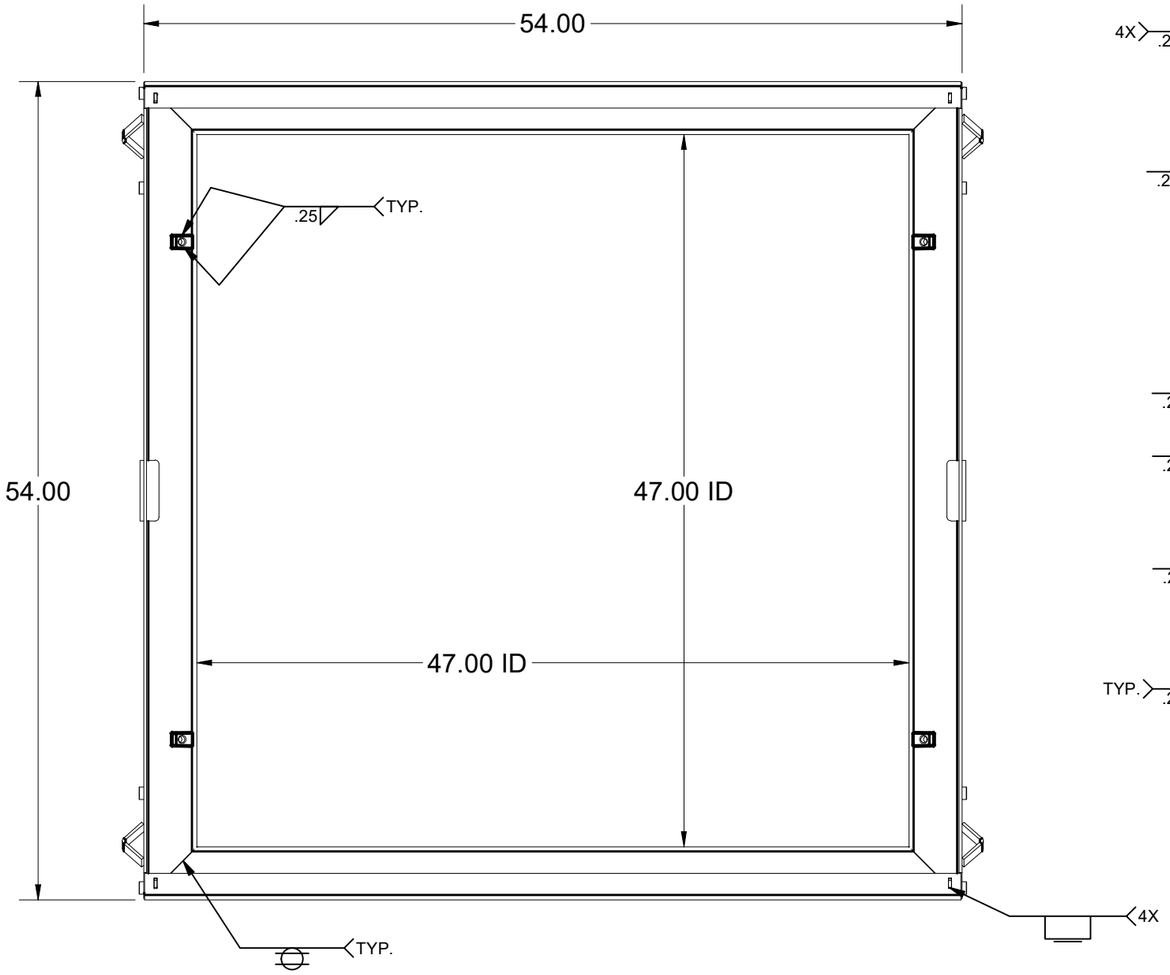


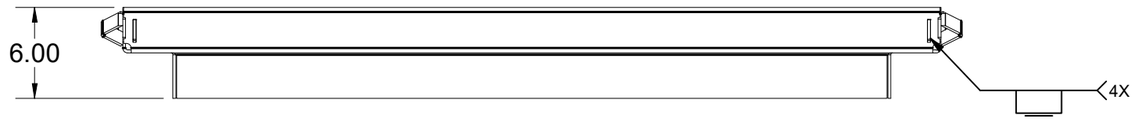


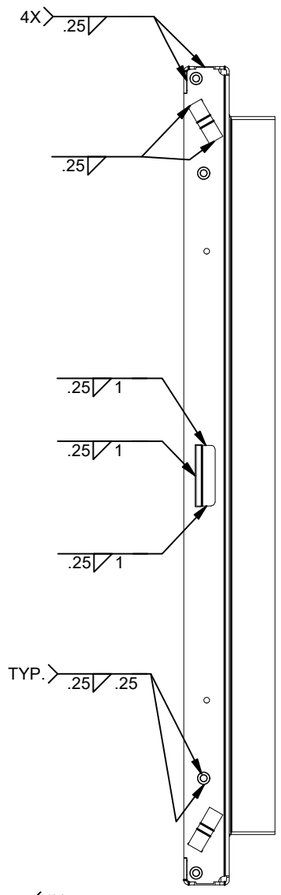


200037309.idw

| | | | |
|---|---|---|---|
| MATERIAL FINISH: Raw | JENSEN METALTECH<br>450 E. GLENDALE AVE. SPARKS. NV 89431<br>775-352-2716 FAX: 755-358-8127<br>*JENSENMETALTECH.COM* | ©2020 Jensen Precast- All rights reserved. All materials appearing as Jensen Precast documents and the like are proprietary work product and are protected under U.S. copyright and other laws. Unless in conjunction with business conducted with Jensen Precast, any use of Jensen Precast work product without express, written consent is prohibited, and recipient is prohibited from distributing any and all work product to non-approved third parties under penalty of civil action. | PART NUMBER & DESCRIPTION: 200037312 FAS-4848-AH3-R-SAC-SMUD-OH06 — REV: |
| MATERIAL SURFACE: Smooth | | | WEIGHT: 140 Lbs — DRAWN BY: E. Massey — SHEET: 7 |
| | | | CREATED: 4/17/2018 — MODIFIED: 4/2/2020 |

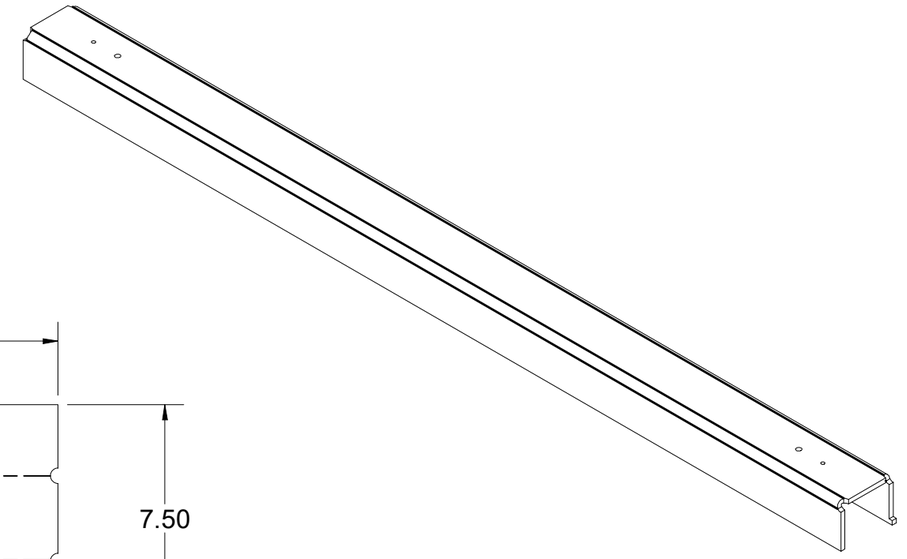

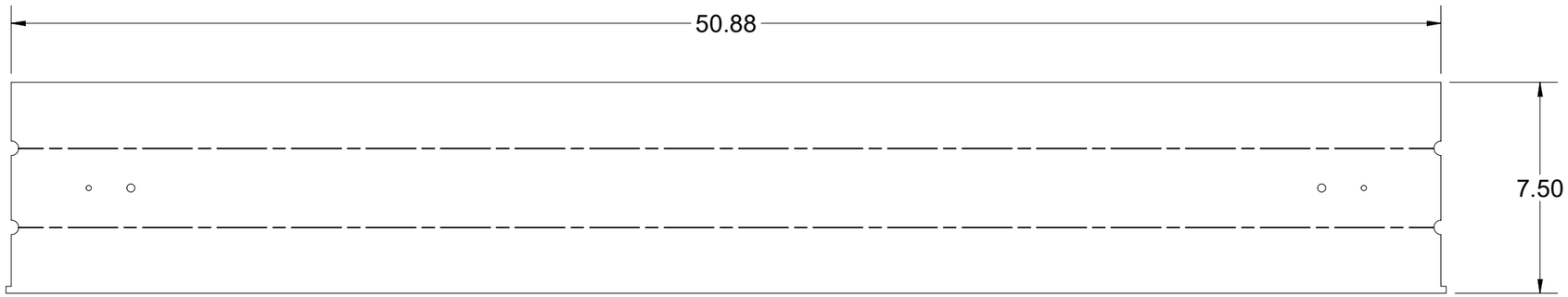


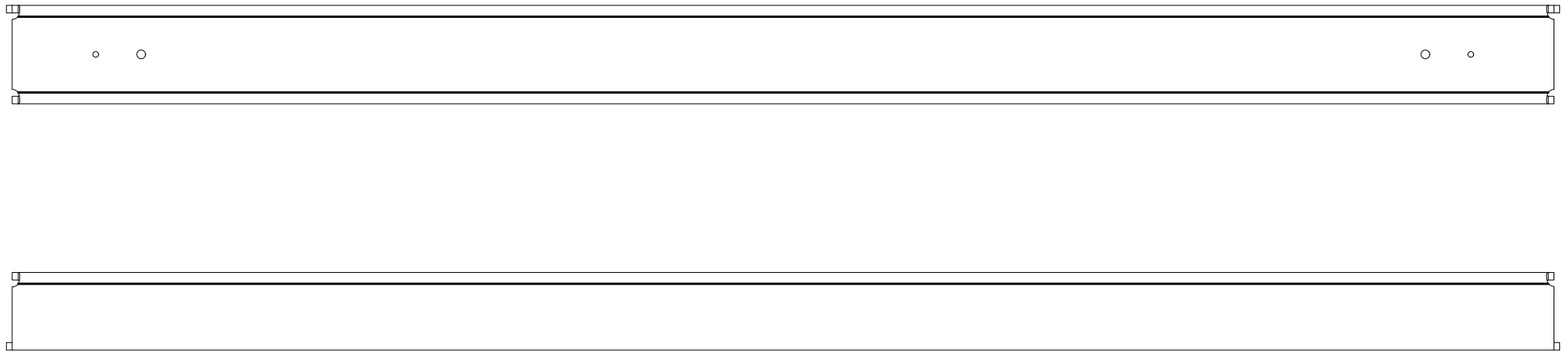

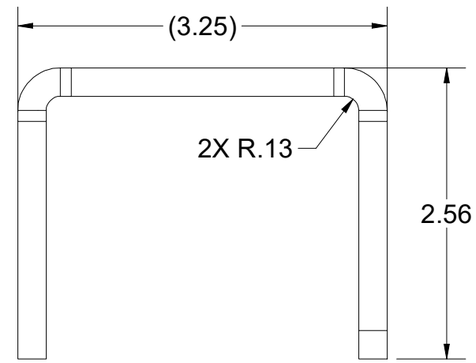


| BEND TABLE | | | | MATERIAL IFS: 100007735 |
|---|---|---|---|---|
| BEND RADIUS | V-OPENING | BEND ANGLE | BEND DEDUCTION | MATERIAL THK: 0.25 |
| 0.125 | 2" | 90 | 0.440 | MAT DESCRIPTION: STL ASTM A36 SM-HRPO RAW .250 |

JENSEN METALTECH
450 E. GLENDALE AVE. SPARKS. NV 89431
775-352-2716 FAX: 755-358-8127
JENSENMETALTECH.COM

©2020 Jensen Precast- All rights reserved.
All materials appearing as Jensen Precast documents and the like are proprietary work product and are protected under U.S. copyright and other laws.
Unless in conjunction with business conducted with Jensen Precast, any use of Jensen Precast work product without express, written consent is prohibited, and recipient is prohibited from distributing any and all work product to non-approved third parties under penalty of civil action.

| NAME & DESCRIPTION: | 200037314<br>Door Component Steel Channel | | REV: A |
|---|---|---|---|
| WEIGHT: 27.631 lbmass | | DRAWN BY: E. Massey | SHEET: 8 OF 16 |
| CREATED: 2/7/2019 | | MODIFIED: 4/2/2020 | |

200037309.idw

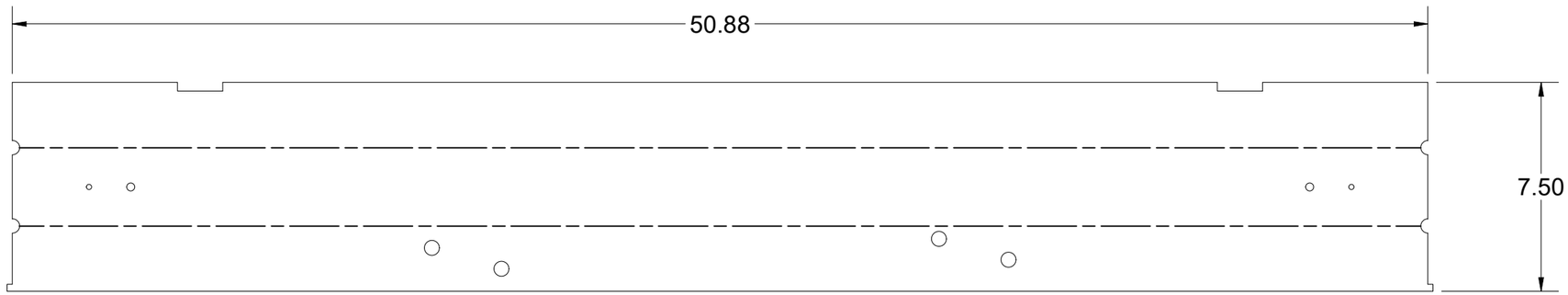


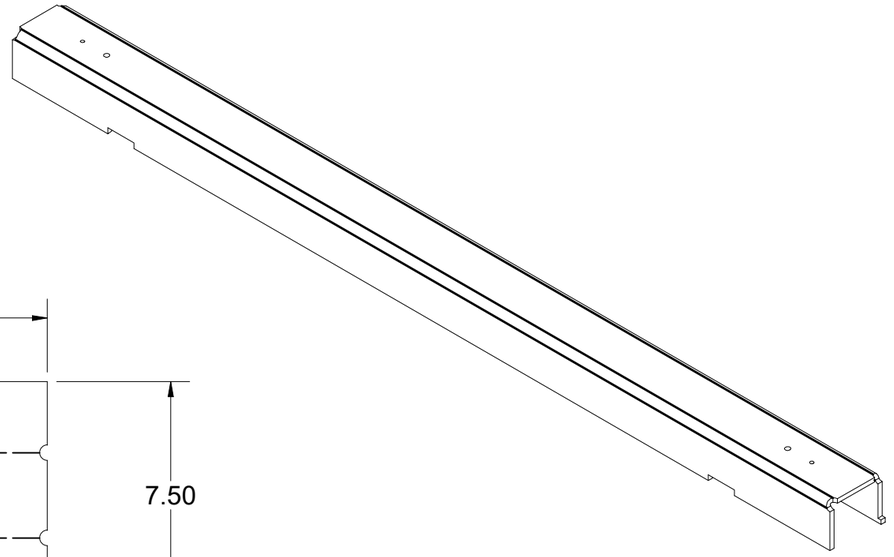

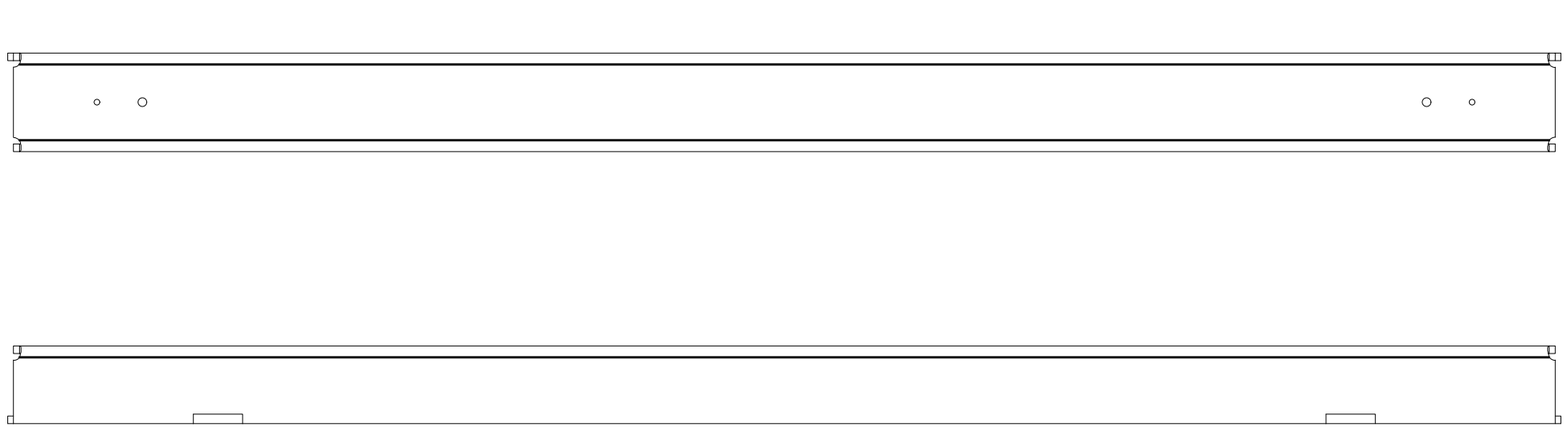

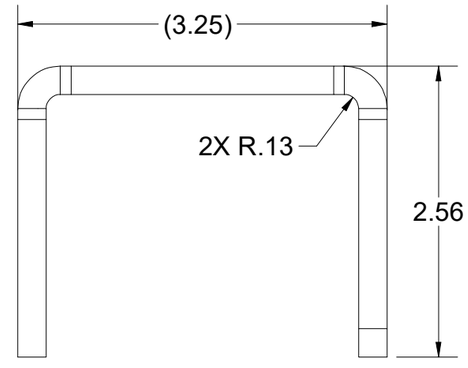


| BEND TABLE | | | |
|---|---|---|---|
| BEND RADIUS | V-OPENING | BEND ANGLE | BEND DEDUCTION |
| 0.125 | 2" | 90 | 0.440 |

MATERIAL IFS: 100007735

MATERIAL THK: 0.25

MAT DESCRIPTION: STL ASTM A36 SM-HRPO RAW .250

JENSEN METALTECH
450 E. GLENDALE AVE. SPARKS. NV 89431
775-352-2716 FAX: 755-358-8127
*JENSENMETALTECH.COM*

©2020 Jensen Precast- All rights reserved.
All materials appearing as Jensen Precast documents and the like are proprietary work product and are protected under U.S. copyright and other laws.
Unless in conjunction with business conducted with Jensen Precast, any use of Jensen Precast work product without express, written consent is prohibited, and recipient is prohibited from distributing any and all work product to non-approved third parties under penalty of civil action.

NAME & DESCRIPTION: 200037315 Door Component Steel Channel

REV: A

WEIGHT: 27.496 lbmass

DRAWN BY: E. Massey

CREATED: 2/7/2019

MODIFIED: 4/2/2020

SHEET: 9 OF 16

200037309.idw

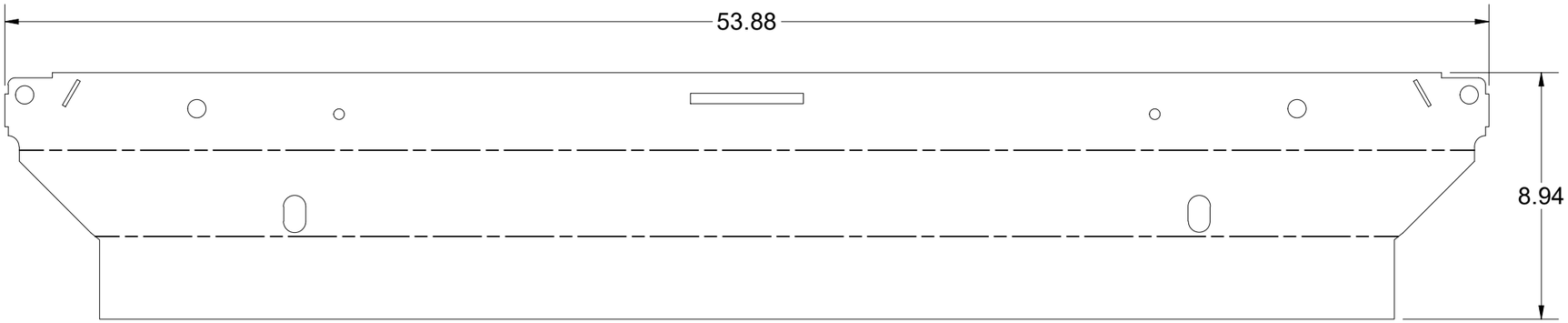


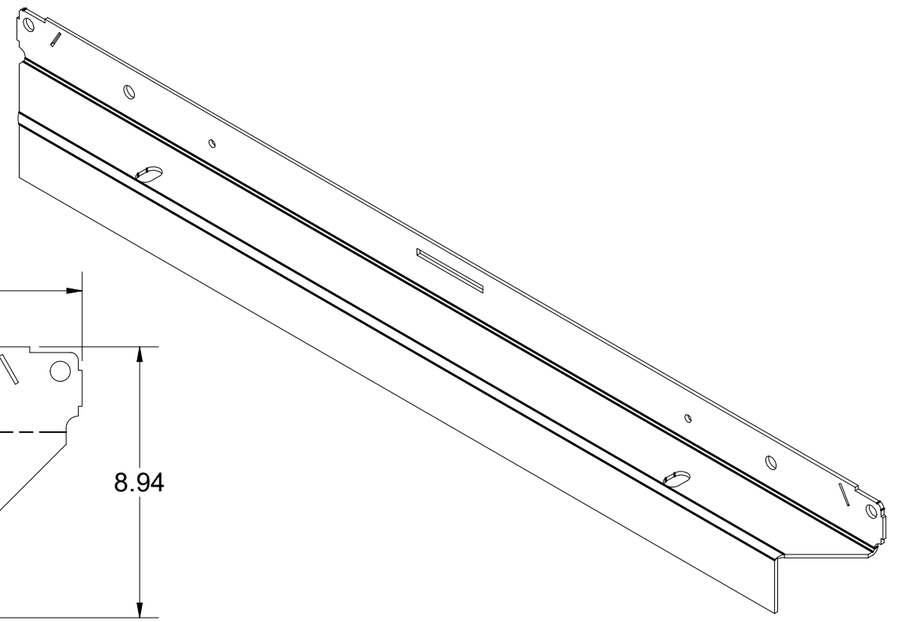

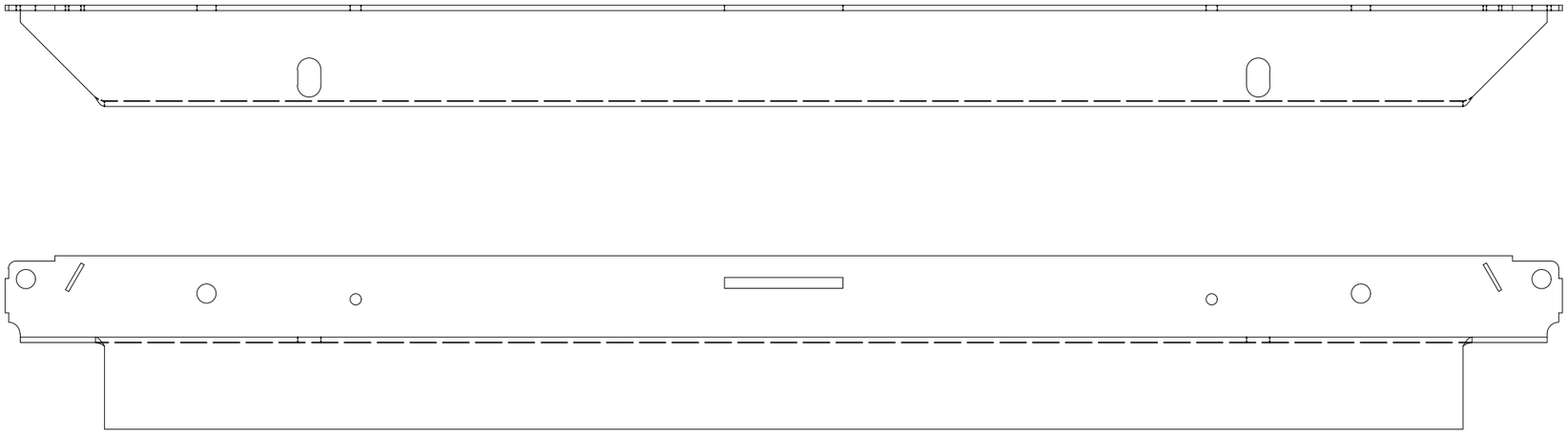

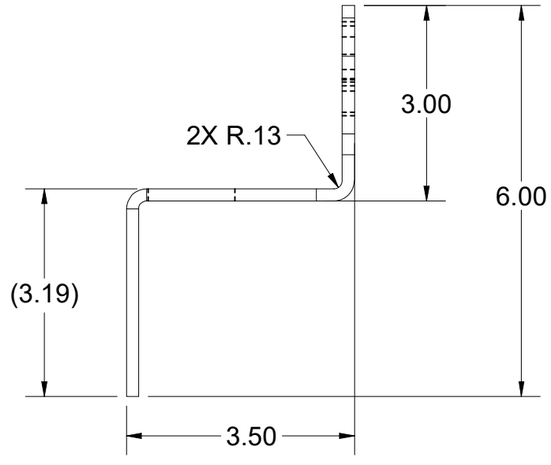


| BEND TABLE | | | |
|---|---|---|---|
| BEND RADIUS | V-OPENING | BEND ANGLE | BEND DEDUCTION |
| 0.125 | 2" | 90 | 0.3750 |

MATERIAL IFS: 100007734

MATERIAL THK: 0.1875

MAT DESCRIPTION: STL ASTM A36 SM-HRPO 60X120 RAW .1875

JENSEN METALTECH
450 E. GLENDALE AVE. SPARKS. NV 89431
775-352-2716 FAX: 755-358-8127
*JENSENMETALTECH.COM*

©2020 Jensen Precast- All rights reserved. All materials appearing as Jensen Precast documents and the like are proprietary work product and are protected under U.S. copyright and other laws. Unless in conjunction with business conducted with Jensen Precast, any use of Jensen Precast work product without express, written consent is prohibited, and recipient is prohibited from distributing any and all work product to non-approved third parties under penalty of civil action.

NAME & DESCRIPTION: 200037320 — Frame Component Steel Frame Side, Adjustable

REV: A

WEIGHT: 24.092 lbmass

DRAWN BY: E. Massey

CREATED: 1/2/2019

MODIFIED: 4/2/2020

SHEET: 10 OF 16

200037309.idw

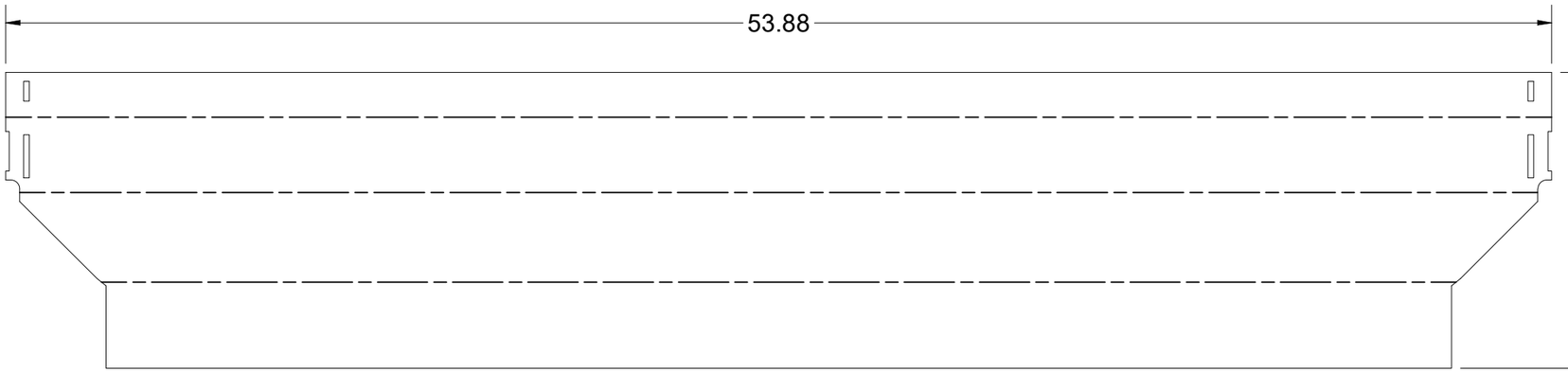


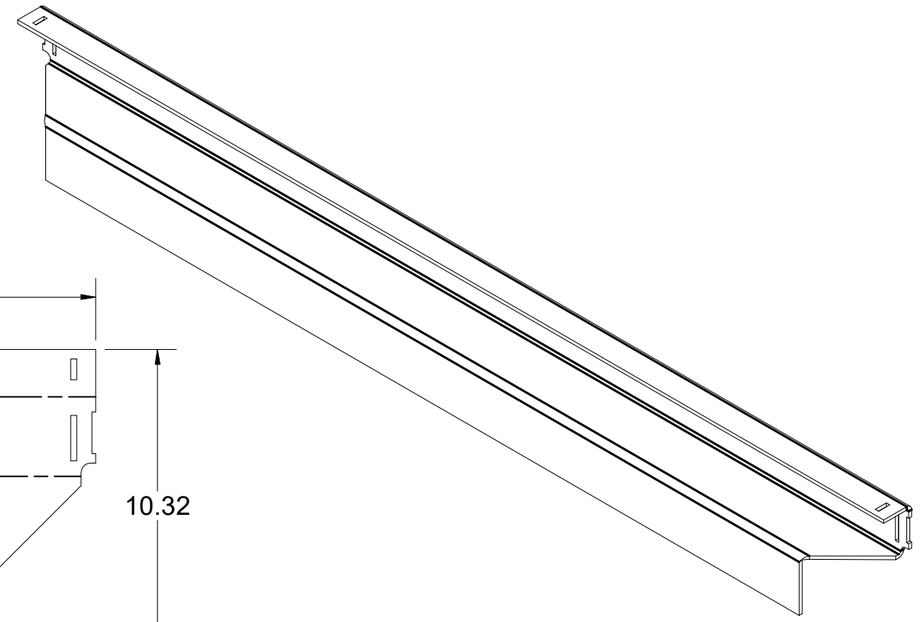

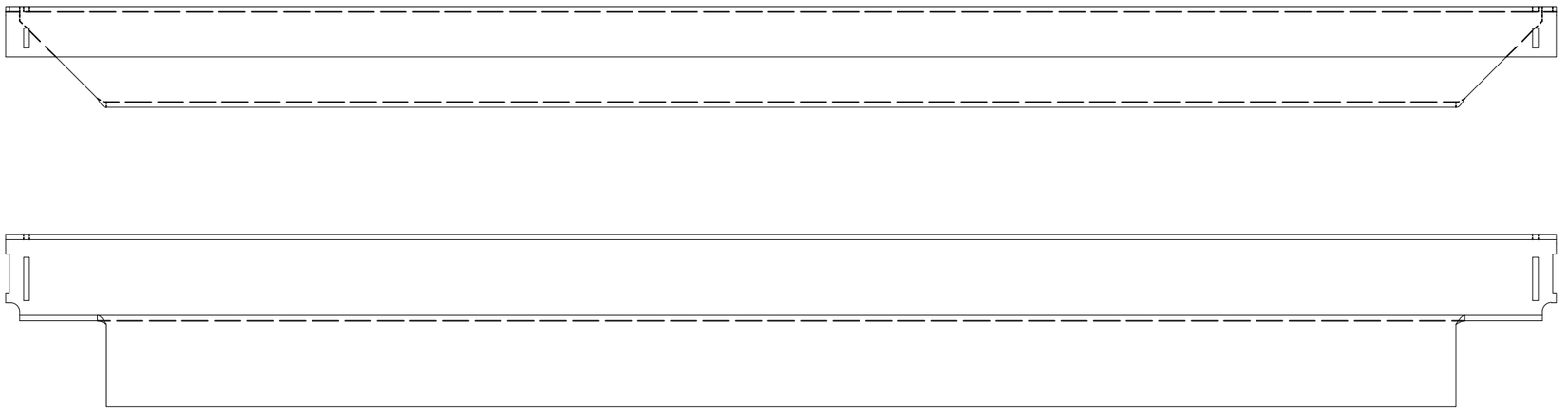

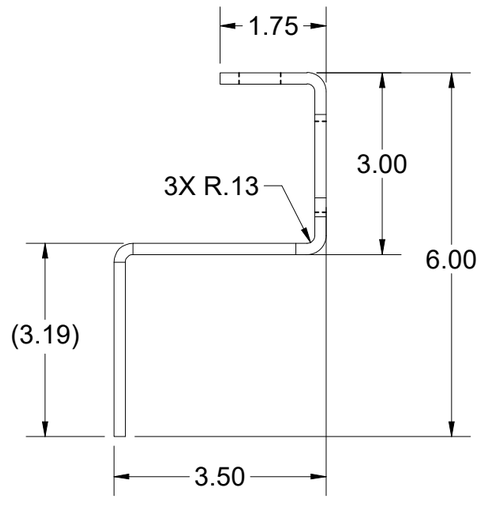


| BEND TABLE | | | | MATERIAL IFS: 100007734 |
|---|---|---|---|---|
| BEND RADIUS | V-OPENING | BEND ANGLE | BEND DEDUCTION | MATERIAL THK: 0.1875 |
| 0.125 | 2" | 90 | 0.3750 | MAT DESCRIPTION: STL ASTM A36 SM-HRPO 60X120 RAW .1875 |

JENSEN METALTECH
450 E. GLENDALE AVE. SPARKS. NV 89431
775-352-2716 FAX: 755-358-8127
*JENSENMETALTECH.COM*

©2020 Jensen Precast- All rights reserved.
All materials appearing as Jensen Precast documents and the like are proprietary work product and are protected under U.S. copyright and other laws.
Unless in conjunction with business conducted with Jensen Precast, any use of Jensen Precast work product without express, written consent is prohibited, and recipient is prohibited from distributing any and all work product to non-approved third parties under penalty of civil action.

| NAME & DESCRIPTION: | | REV: |
|---|---|---|
| 200037319<br>Frame Component Steel Frame End, Adjustable | | A |
| WEIGHT: 28.535 lbmass | DRAWN BY: E. Massey | SHEET: 11 OF 16 |
| CREATED: 10/29/2018 | MODIFIED: 4/2/2020 | |

200037309.idw

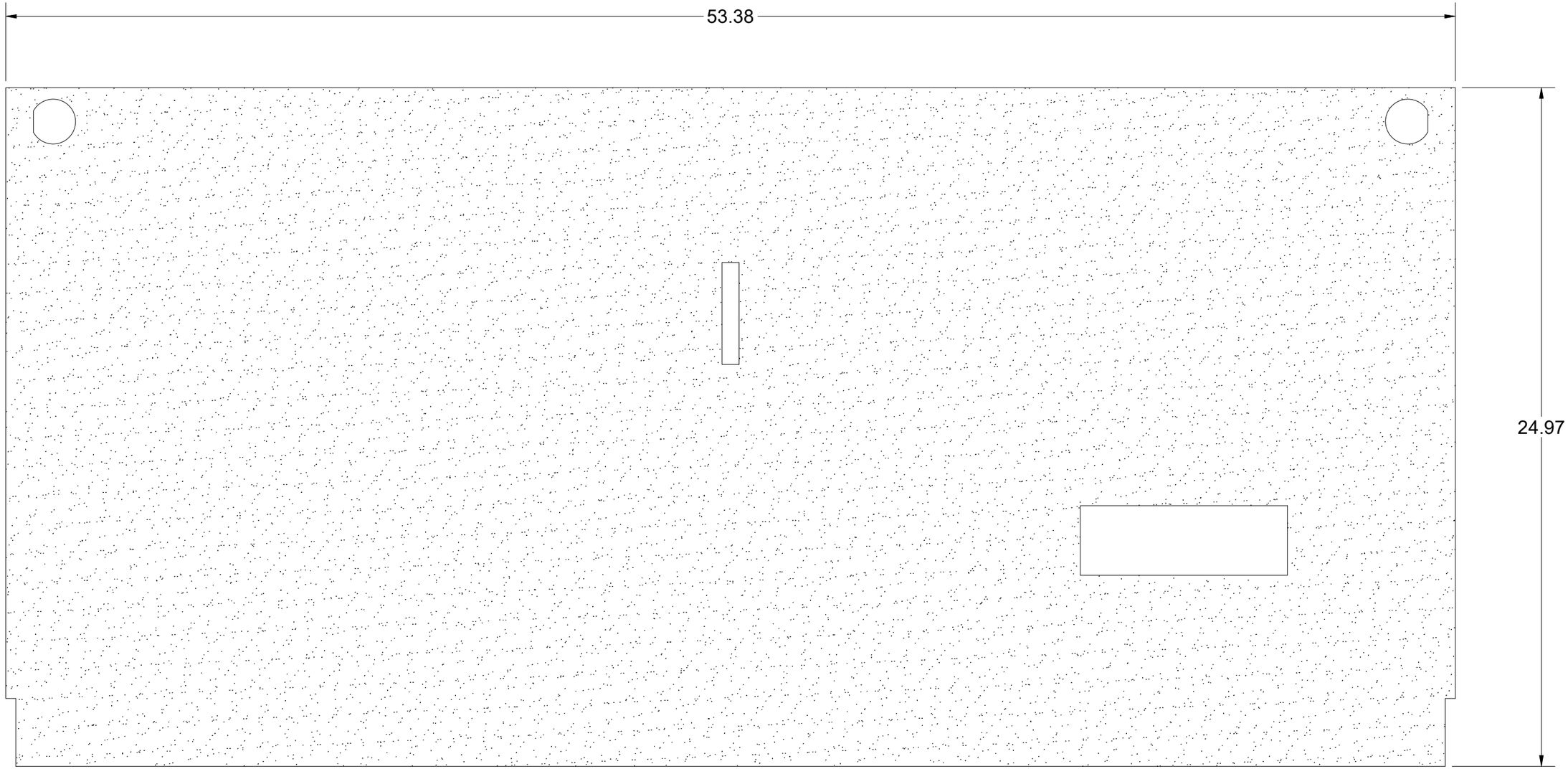


200037309.idw

| BEND TABLE | | | | MATERIAL IFS: 100007735 |
|---|---|---|---|---|
| BEND RADIUS | V-OPENING | BEND ANGLE | BEND DEDUCTION | MATERIAL THK: 0.25 |
| - | - | - | - | MAT DESCRIPTION: STL ASTM A36 SM-HRPO RAW .250 |

JENSEN METALTECH
450 E. GLENDALE AVE. SPARKS. NV 89431
775-352-2716 FAX: 755-358-8127
*JENSENMETALTECH.COM*

©2020 Jensen Precast- All rights reserved.
All materials appearing as Jensen Precast documents and the like are proprietary work product and are protected under U.S. copyright and other laws.
Unless in conjunction with business conducted with Jensen Precast, any use of Jensen Precast work product without express, written consent is prohibited, and recipient is prohibited from distributing any and all work product to non-approved third parties under penalty of civil action.

| NAME & DESCRIPTION: | 200037318<br>Door Component Steel Plate, Top Nameplate | | REV: A |
|---|---|---|---|
| WEIGHT: 92.635 lbmass | | DRAWN BY: E. Massey | SHEET: 12 OF 16 |
| CREATED: 1/2/2019 | | MODIFIED: 4/2/2020 | |

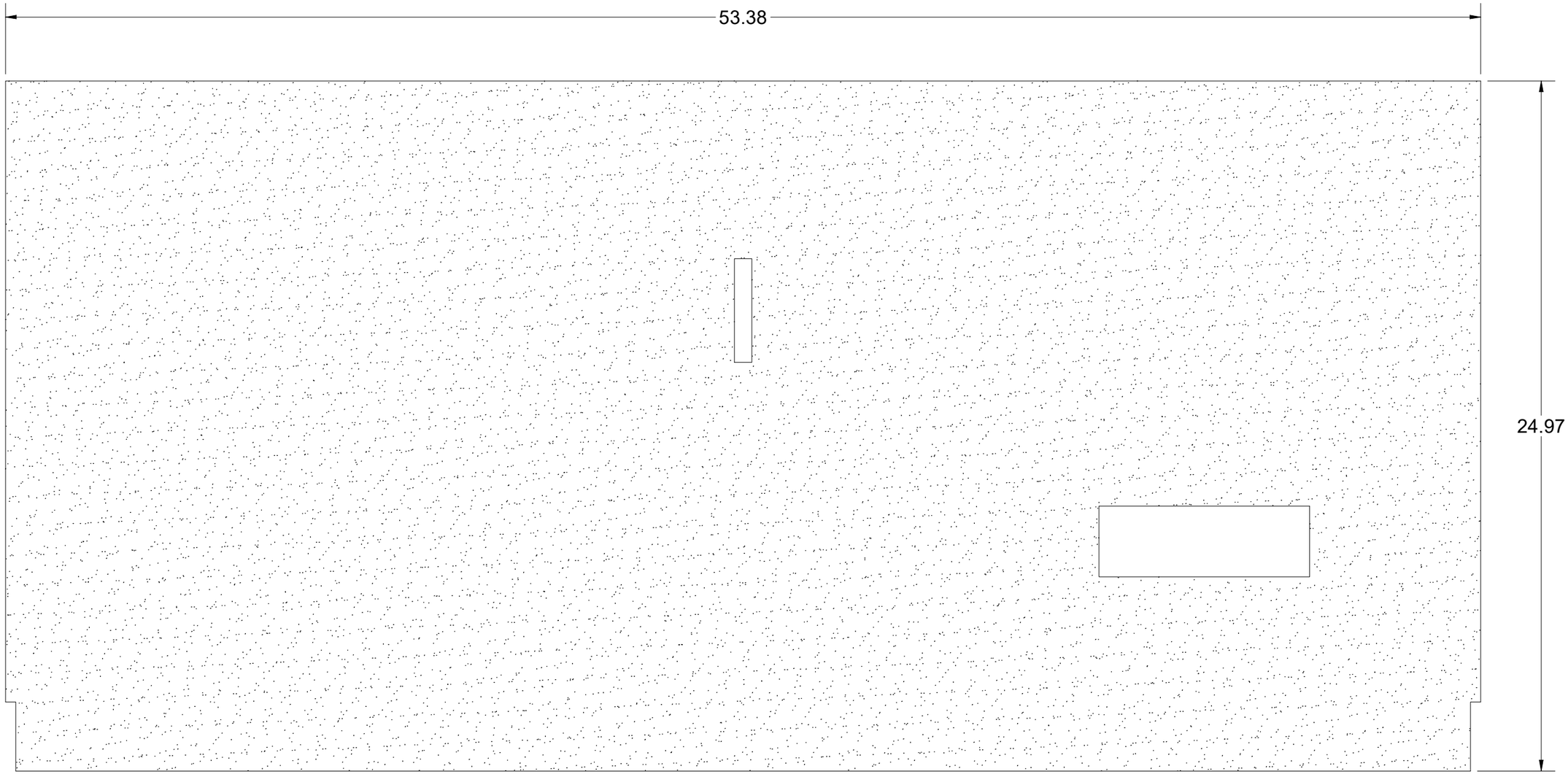


200037309.idw

| BEND TABLE | | | | MATERIAL IFS: 100007735 |
|---|---|---|---|---|
| BEND RADIUS | V-OPENING | BEND ANGLE | BEND DEDUCTION | MATERIAL THK: 0.25 |
| - | - | - | - | MAT DESCRIPTION: STL ASTM A36 SM-HRPO RAW .250 |

JENSEN METALTECH
450 E. GLENDALE AVE. SPARKS. NV 89431
775-352-2716 FAX: 755-358-8127
JENSENMETALTECH.COM

©2020 Jensen Precast- All rights reserved.
All materials appearing as Jensen Precast documents and the like are proprietary work product and are protected under U.S. copyright and other laws.
Unless in conjunction with business conducted with Jensen Precast, any use of Jensen Precast work product without express, written consent is prohibited, and recipient is prohibited from distributing any and all work product to non-approved third parties under penalty of civil action.

| NAME & DESCRIPTION: | 200037316<br>Door Component Steel Plate, Bottom Nameplate | REV: A |
|---|---|---|
| WEIGHT: 92.935 lbmass | DRAWN BY: E. Massey | SHEET: 13 OF 16 |
| CREATED: 1/3/2019 | MODIFIED: 4/2/2020 | |

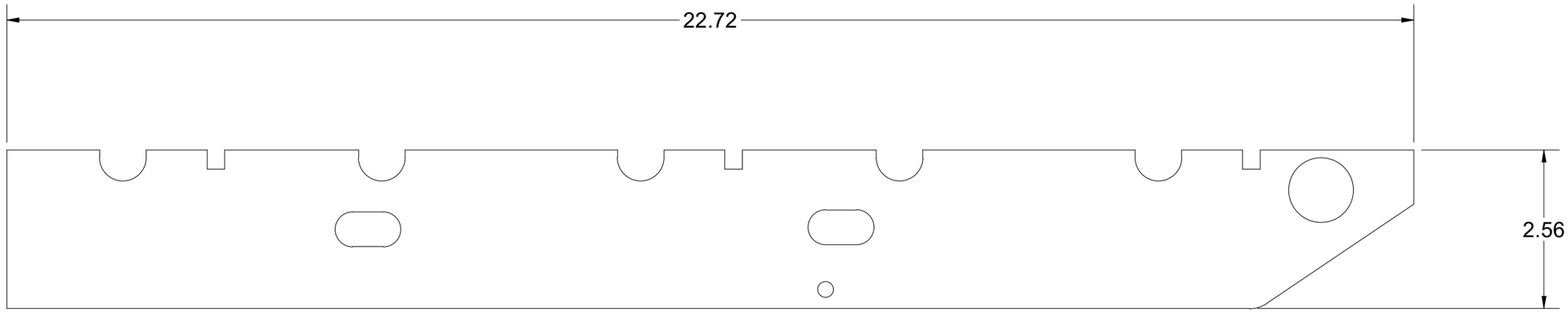


200037309.idw

| BEND TABLE | | | | MATERIAL IFS: 100007735 |
|---|---|---|---|---|
| BEND RADIUS | V-OPENING | BEND ANGLE | BEND DEDUCTION | MATERIAL THK: 0.25 |
| - | - | - | - | MAT DESCRIPTION: STL ASTM A36 SM-HRPO RAW .250 |

JENSEN METALTECH
450 E. GLENDALE AVE. SPARKS. NV 89431
775-352-2716 FAX: 755-358-8127
*JENSENMETALTECH.COM*

©2020 Jensen Precast- All rights reserved.
All materials appearing as Jensen Precast documents and the like are proprietary work product and are protected under U.S. copyright and other laws.
Unless in conjunction with business conducted with Jensen Precast, any use of Jensen Precast work product without express, written consent is prohibited, and recipient is prohibited from distributing any and all work product to non-approved third parties under penalty of civil action.

| NAME & DESCRIPTION: | | REV: |
|---|---|---|
| 200037317<br>Door Component Steel Side Bar | | A |
| WEIGHT: 3.714 lbmass | DRAWN BY: E. Massey | SHEET: 14 OF 16 |
| CREATED: 1/3/2019 | MODIFIED: 4/2/2020 | |

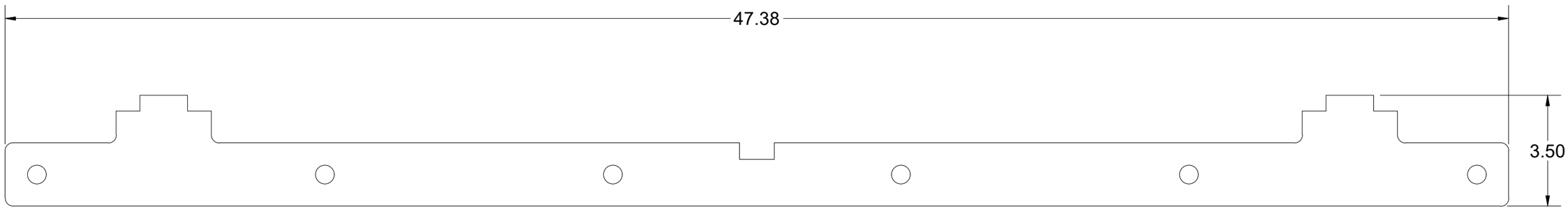


200037309.idw

| BEND TABLE | | | | MATERIAL IFS: 100007735 |
|---|---|---|---|---|
| BEND RADIUS | V-OPENING | BEND ANGLE | BEND DEDUCTION | MATERIAL THK: 0.25 |
| - | - | - | - | MAT DESCRIPTION: STL ASTM A36 SM-HRPO RAW .250 |

JENSEN METALTECH
450 E. GLENDALE AVE. SPARKS. NV 89431
775-352-2716 FAX: 755-358-8127
*JENSENMETALTECH.COM*

©2020 Jensen Precast- All rights reserved.
All materials appearing as Jensen Precast documents and the like are proprietary work product and are protected under U.S. copyright and other laws.
Unless in conjunction with business conducted with Jensen Precast, any use of Jensen Precast work product without express, written consent is prohibited, and recipient is prohibited from distributing any and all work product to non-approved third parties under penalty of civil action.

| NAME & DESCRIPTION: | 200013208<br>Door Component Steel Lap Bar | | REV: |
|---|---|---|---|
| WEIGHT: 7.099 lbmass | DRAWN BY: E. Massey | | SHEET: 15 OF 16 |
| CREATED: 4/9/2020 | MODIFIED: 4/2/2020 | | |

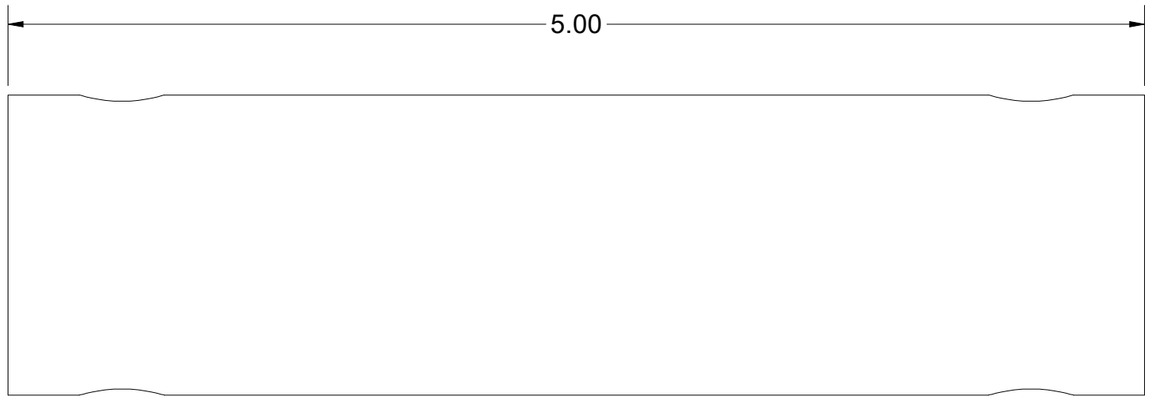


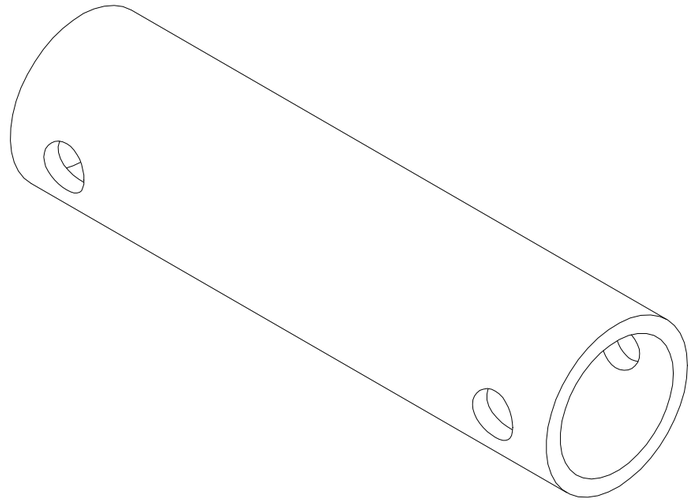

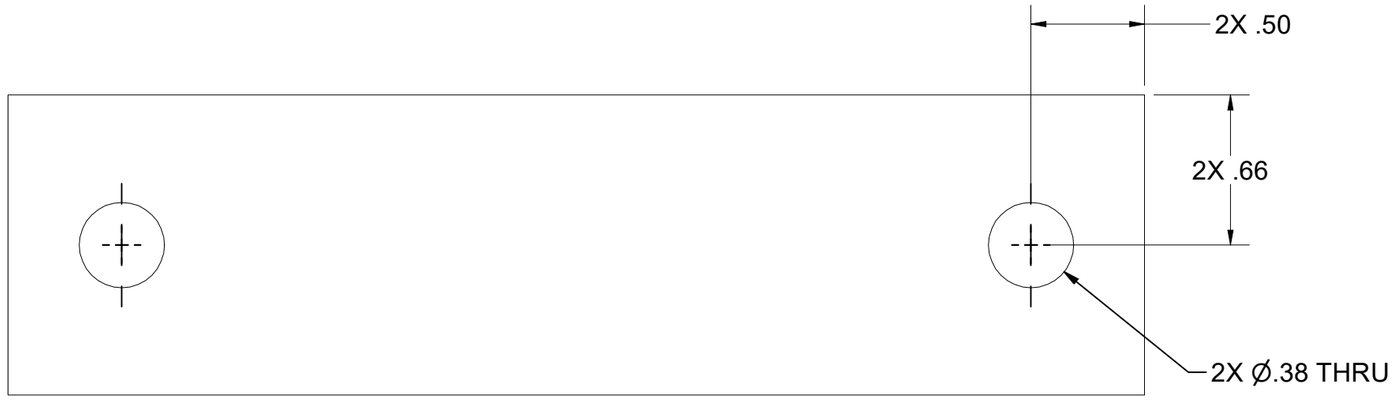


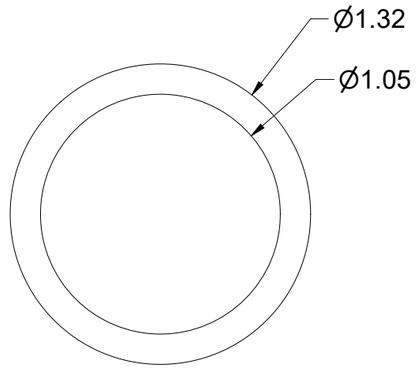


200037309.idw

| BEND TABLE | | | | MATERIAL IFS: 100003296 | | | |
|---|---|---|---|---|---|---|---|
| BEND RADIUS | V-OPENING | BEND ANGLE | BEND DEDUCTION | MATERIAL THK: 0.27 | | | |
| | | | | MAT DESCRIPTION: STRUCTURAL STEEL PIPE SCH 40 - 1 | | | |

JENSEN METALTECH
450 E. GLENDALE AVE. SPARKS. NV 89431
775-352-2716 FAX: 755-358-8127
*JENSENMETALTECH.COM*

©2020 Jensen Precast- All rights reserved.
All materials appearing as Jensen Precast documents and the like are proprietary work product and are protected under U.S. copyright and other laws.
Unless in conjunction with business conducted with Jensen Precast, any use of Jensen Precast work product without express, written consent is prohibited, and recipient is prohibited from distributing any and all work product to non-approved third parties under penalty of civil action.

| NAME & DESCRIPTION: 200037326 STRUCTURAL STEEL PIPE SCH 40 - 1 | | REV: A |
|---|---|---|
| WEIGHT: 0.686 lbmass | DRAWN BY: E. Massey | SHEET: 16 OF 16 |
| CREATED: 2/14/2020 | MODIFIED: 4/2/2020 | |