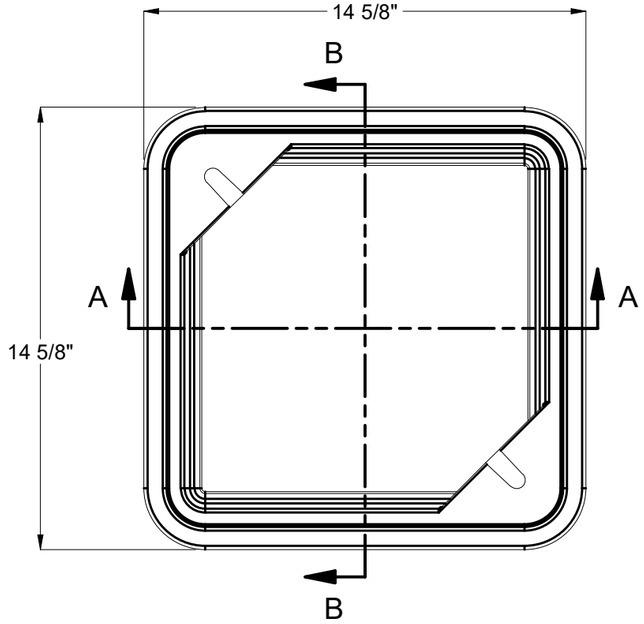

BILL OF MATERIALS				
ITEM	UNIT QTY	QTY	PART NUMBER	DESCRIPTION
1	0.257 ft^3	0.257 ft^3	100035038	CONCRETE COMPOSITE BOX MIX BRUCE
2	1	2	100031018	HPC PLUGS 30 X 15 *0.75-2.5 LDPEBLK CAP521-BLK
3	1	2	100021840	SQUARE NUT 1/2-13 304SS

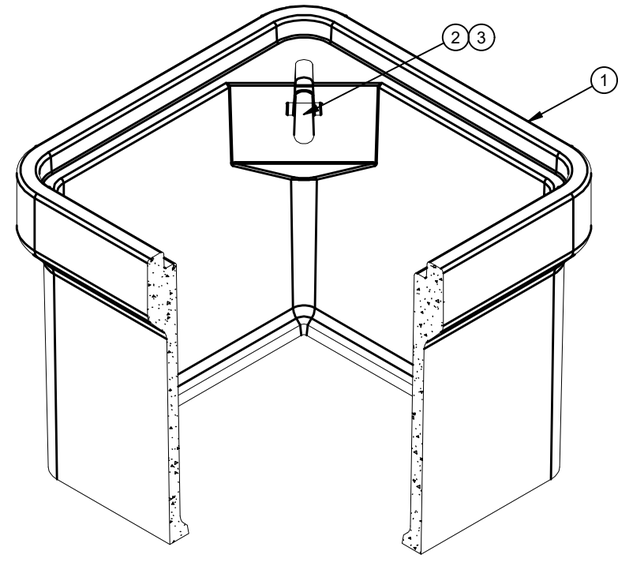

200036300.idw

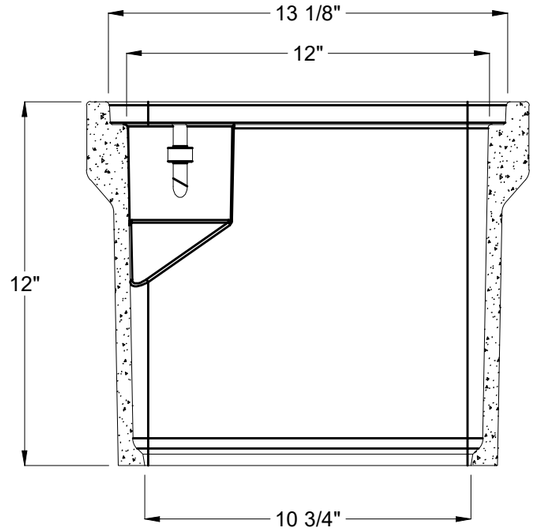

SECTION A-A

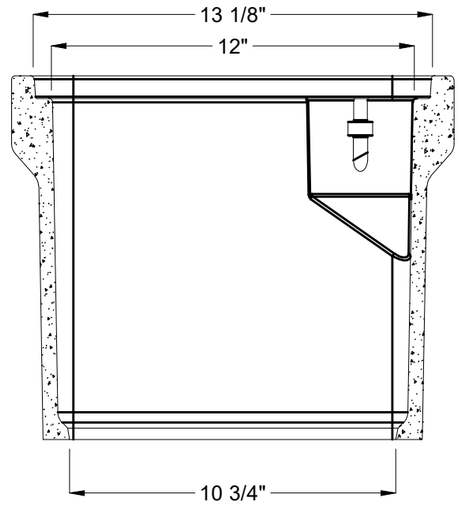

SECTION B-B

REVISION HISTORY			
REV	DESCRIPTION	DATE	BY
A	INITIAL RELEASE	10/2/2020	BGD

DESIGN SPEC: ANSI/SCTE-77	APPROX. WEIGHT: 31.62 lbs		
AGENCY:	DESIGN/TEST LOAD: 15/22.5 kip		
AGENCY SPEC:	LOADING SPEC: Tier-15		

JENSEN PRECAST EST. 1968

©2024 Jensen Precast- All rights reserved.
Unless expressly authorized by Jensen Precast any use or duplication is strictly prohibited under penalty of civil action or codes.

DESCRIPTION: HPC 1212x12 Polymer Box 1/2-13 SS Nut			REV: A-1
PART #: 200036300		DRAWN BY: M. Baumann	SHEET: 1 OF 1
CREATED: 2/19/2020		MODIFIED: 7/29/2024	