DESIGN NOTES
■ DESIGNED IN ACCORDANCE WITH FULL TRAFFIC H20 LOADING USING 5000 PSI COMPRESSIVE STRENGTH CONCRETE AND 60,000 PSI YIELD STRENGTH ASTM A-706 STEEL REINFORCEMENT PER CALCS.
■ FOR COMPLETE DESIGN AND PRODUCT INFORMATION CONTACT JENSEN PRECAST.
■ CONFORMS TO CITY OF RENO STANDARD DETAILS FOR PUBLIC WORKS CONSTRUCTION DETAIL R-207B, DATED 12/2019

BILL OF MATERIALS

ITEM	QTY	PART NUMBER	DESCRIPTION
4	1	100015200	CI FRAME I-3516-R4 ASTM A-48 CL35B HI-CAP LT
5	1	100015201	CI FRAME I-3516-R5 ASTM A-48 CL35B HI-CAP RT
1	2	100005916	CI CURB BOX I-3516-3GH ASTM A48 CL35B FISH
2	2	100005917	CI GRATE I-3517-02 TYPE L VANED ASTM A48 CL35B W/BIKE BARS
3	1	200035951	Drainage 2472x36 Rect. Bottom Section Knockout
7	AS REQUIRED	200021652	Riser 2472x6 Rect. Riser
8	AS REQUIRED	200025370	Riser 2472x18 Rect. Riser
6	AS REQUIRED	200021649	Riser 2472x24 Rect. Riser

200035952.idw

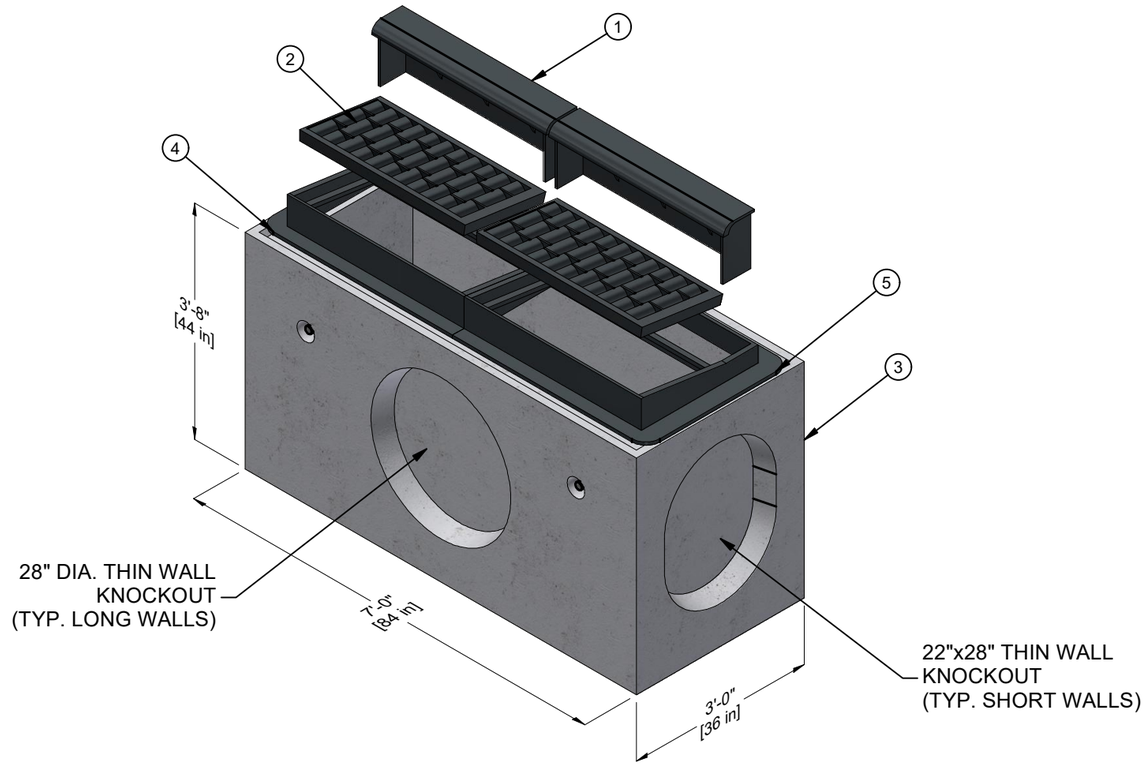

ISO LAYOUT

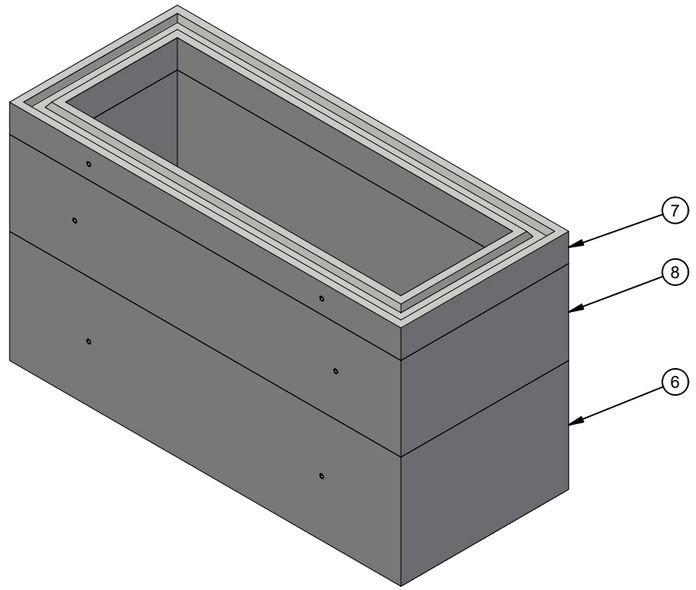

OPTIONAL RISERS

NOTE: ALL UNUSED THIN WALL KNOCKOUTS MUST BE FULLY GROUTED

REVISION HISTORY			
REV	DESCRIPTION	DATE	BY
A	INITIAL RELEASE - 1905-17489-NNV	05/30/19	ACHO
B	FRAME BOM REVISION, OPTIONAL RISERS, ADDED AGENCY	5/24/2023	CF

BURY DEPTH:	0.0' - 6.0' to Top		
WATER LEVEL:	5.0'	WEIGHT:	11941.79 Lbs
DESIGN SPEC:	ACI 318,ASTM C890	LOADING SPEC:	A-16 (AASHTO HS20-44)
AGENCY:	Reno	AGENCY SPEC:	Type 4-R Double R-207B

JENSEN PRECAST EST. 1968

WWW.JENSENPRECAST.COM

©2019 Jensen Precast- All rights reserved.
All materials appearing as Jensen Precast documents and the like are proprietary work product and are protected under U.S. copyright and other laws.
Unless in conjunction with business conducted with Jensen Precast, any use of Jensen Precast work product without express, written consent is prohibited, and recipient is prohibited from distributing any and all work product to non-approved third parties under penalty of civil action.

DESCRIPTION:	Drainage Layout 2472x36 24"x72"C Reno Type 4-R Double R-207B LAYOUT REVIEW		REV: B-3
PART NUMBER:	200035952	DRAWN BY:	C. Flores
CREATED:	5/29/2019	MODIFIED:	5/24/2023
			SHEET: 1 OF 2

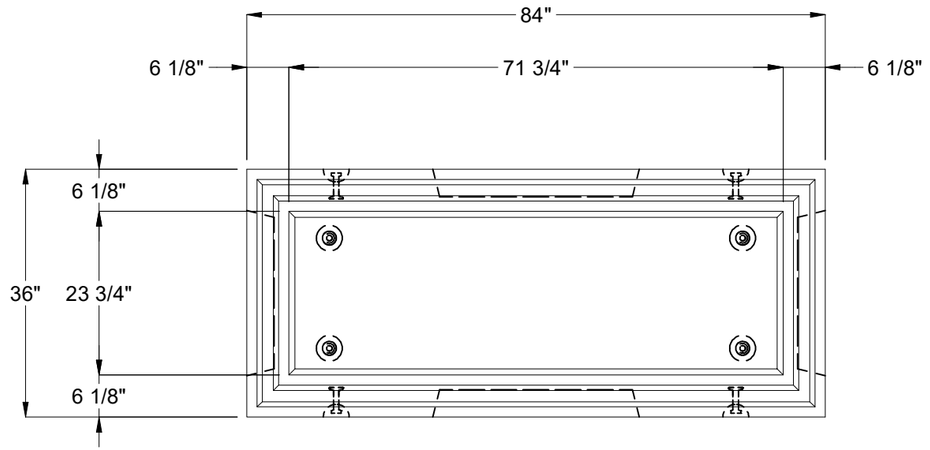

PLAN VIEW

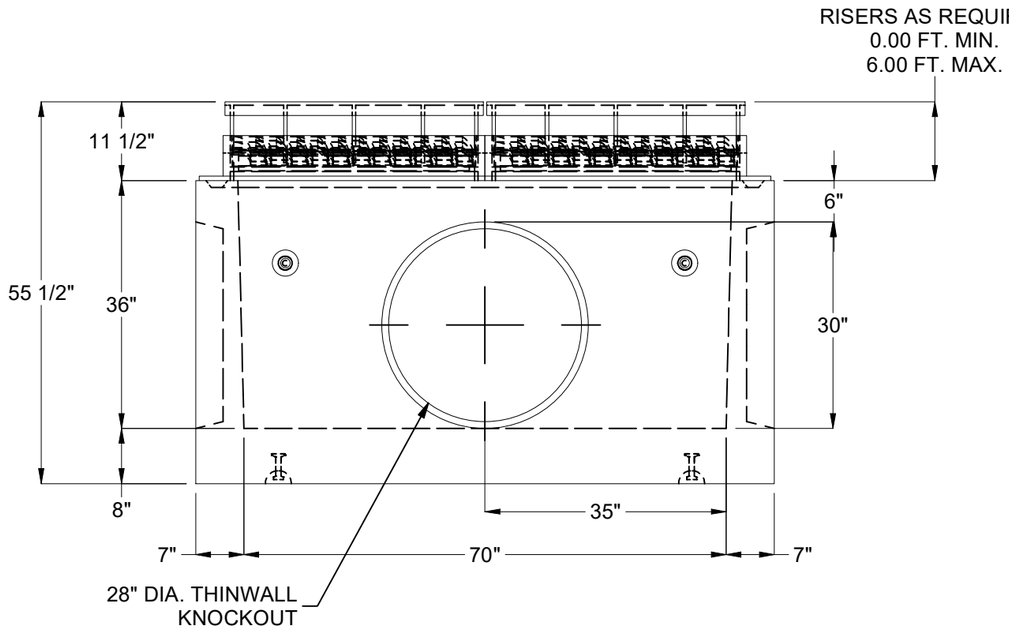

SIDE ELEVATION VIEW
(OPPOSITE WALL SIMILAR)

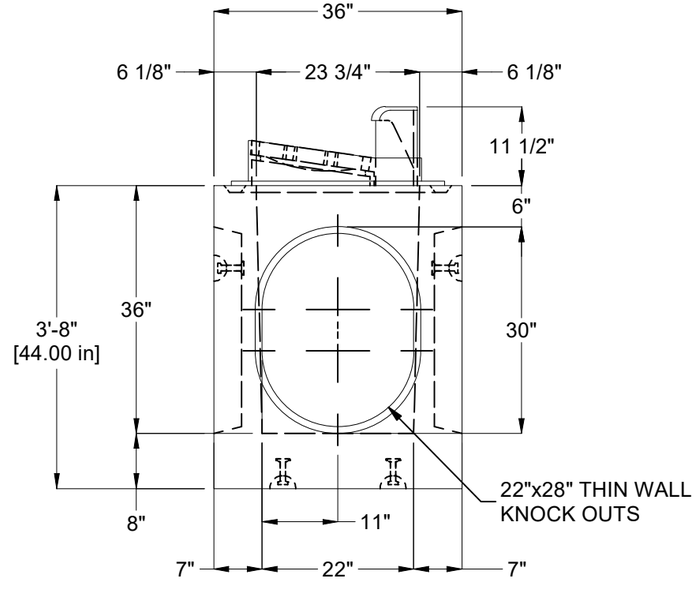

ELEVATION VIEW
(OPPOSITE WALL SIMILAR)

BURY DEPTH:	0.0' - 6.0' to Top		
WATER LEVEL:	5.0'	WEIGHT:	11941.79 Lbs
DESIGN SPEC:	ACI 318,ASTM C890	LOADING SPEC:	A-16 (AASHTO HS20-44)
AGENCY:	Reno	AGENCY SPEC:	Type 4-R Double R-207B

JENSEN PRECAST EST. 1968

WWW.JENSENPRECAST.COM

©2019 Jensen Precast- All rights reserved.
All materials appearing as Jensen Precast documents and the like are proprietary work product and are protected under U.S. copyright and other laws.
Unless in conjunction with business conducted with Jensen Precast, any use of Jensen Precast work product without express, written consent is prohibited, and recipient is prohibited from distributing any and all work product to non-approved third parties under penalty of civil action.

DESCRIPTION:	Drainage Layout 2472x36 24"x72"C Reno Type 4-R Double R-207B LAYOUT DRAWING		REV: B-3
PART NUMBER:	200035952	DRAWN BY:	C. Flores
CREATED:	5/29/2019	MODIFIED:	5/24/2023
			SHEET: 2 OF 2

200035952.idw