NOTES
■ FOR COMPLETE DESIGN AND PRODUCT INFORMATION CONTACT JENSEN PRECAST.

BILL OF MATERIALS

ITEM	UNIT QTY	QTY	PART NUMBER	DESCRIPTION
1	37.226 ft^3	37.226 ft^3	100011425	CONCRETE MIX GENERIC 5000 PSI
2	1	1	200035953	REINFORCING MAT 200035953
3	1	8	100002872	ANCHOR DOGBONE P52 4T X 3-3/4" GALV

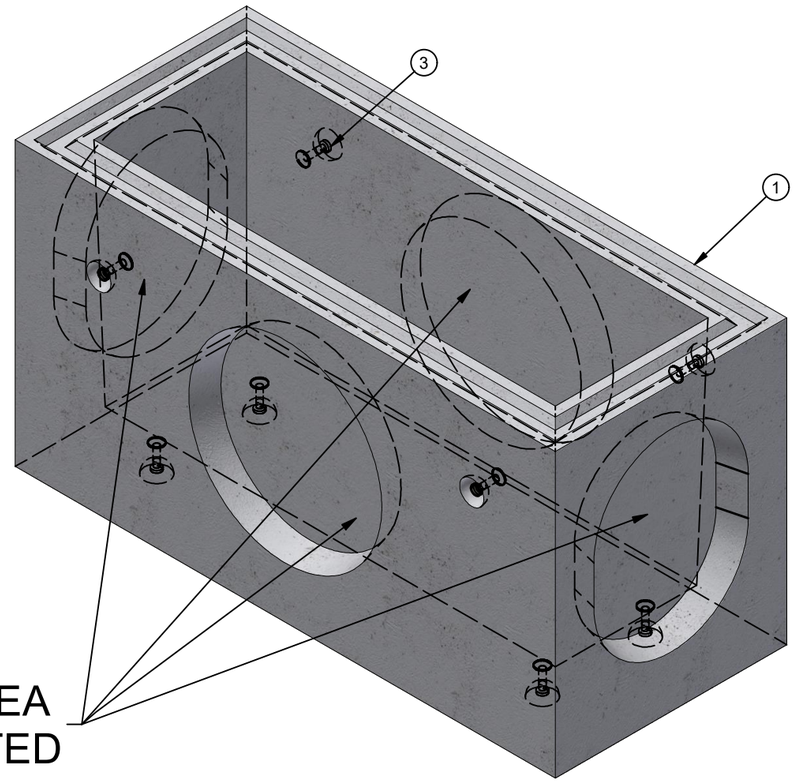

NOTE: ALL UNUSED AREA SHOULD BE FULLY GROUTED

ISO LAYOUT

LIFTING NOTES
■ THIS CONCRETE PRODUCT IS DESIGNED TO BE LIFTED AT 1500 PSI WITH 4 LIFT CONNECTIONS EQUALLY LOADED TO 4 LIFTING POINTS AT A MINIMUM 90° SLING ANGLE, MEASURED FROM HORIZONTAL.

BURY DEPTH:	Maximum 9.0' to Inside Floor		
WATER LEVEL:	5.0'	WEIGHT:	5630.49 Lbs
DESIGN SPEC:	ACI 318,ASTM C890	LOADING SPEC:	A-16 (AASHTO HS20-44)
REINFORCEMENT TYPE:	Rebar	LIFTING TYPE:	Dogbone

JENSEN PRECAST EST. 1968

WWW.JENSENPRECAST.COM

©2019 Jensen Precast- All rights reserved.
All materials appearing as Jensen Precast documents and the like are proprietary work product and are protected under U.S. copyright and other laws.
Unless in conjunction with business conducted with Jensen Precast, any use of Jensen Precast work product without express, written consent is prohibited, and recipient is prohibited from distributing any and all work product to non-approved third parties under penalty of civil action.

REVISION HISTORY			
REV	DESCRIPTION	DATE	BY
A	INITIAL RELEASE - 1905-17489-NNV	11/16/2019	VGL
B	REBAR REVISION	9/18/2023	CF

DESCRIPTION:	Drainage 2472x36 Rect. Bottom Section Knockout CASTING LAYOUT		REV: B-1
PART NUMBER:	200035951	DRAWN BY: C.Flores	SHEET: 1 OF 2
CREATED:	5/29/2019	MODIFIED: 9/18/2023	

200035951.idw

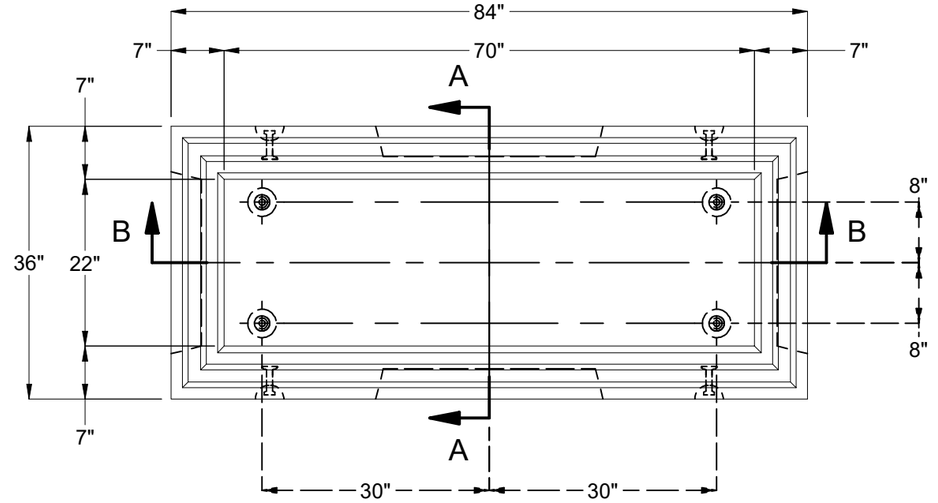

PLAN VIEW

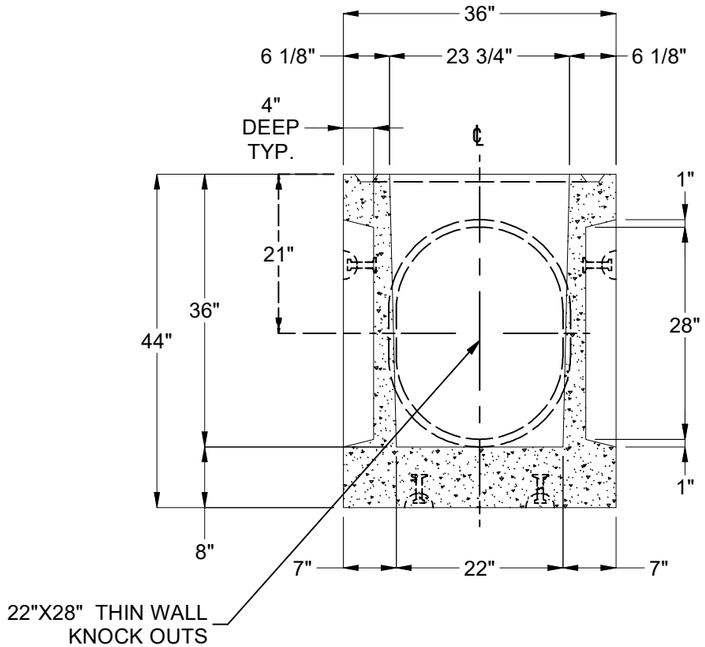

SECTION A-A
(TYPICAL BOTH SIDES)

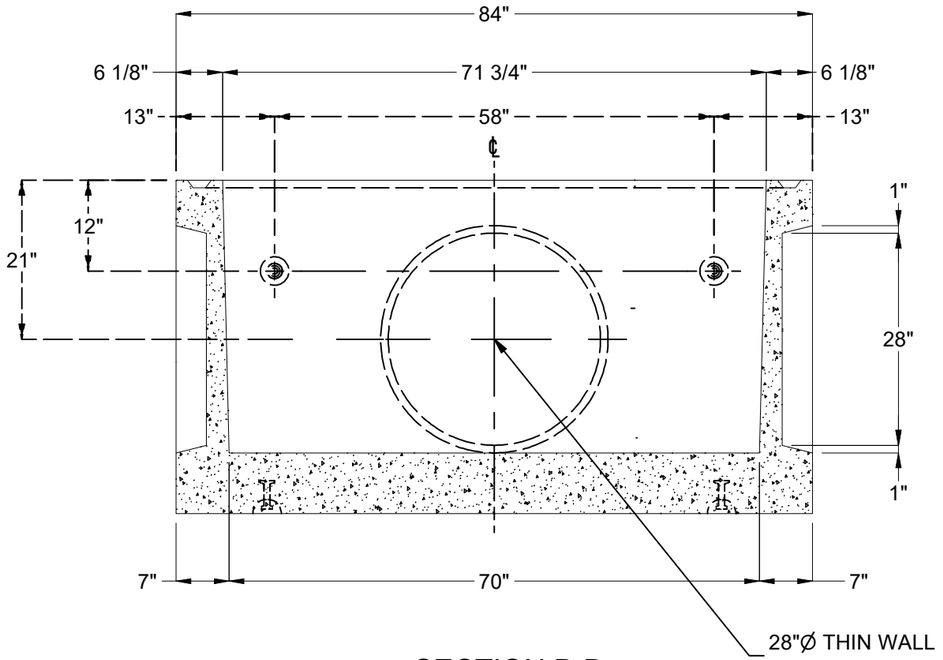

SECTION B-B
(TYPICAL BOTH SIDES)

BURY DEPTH:	Maximum 9.0' to Inside Floor		
WATER LEVEL:	5.0'	WEIGHT:	5630.49 Lbs
DESIGN SPEC:	ACI 318,ASTM C890	LOADING SPEC:	A-16 (AASHTO HS20-44)
REINFORCEMENT TYPE:	Rebar	LIFTING TYPE:	Dogbone

JENSEN PRECAST EST. 1968

WWW.JENSENPRECAST.COM

©2019 Jensen Precast- All rights reserved.
All materials appearing as Jensen Precast documents and the like are proprietary work product and are protected under U.S. copyright and other laws.
Unless in conjunction with business conducted with Jensen Precast, any use of Jensen Precast work product without express, written consent is prohibited, and recipient is prohibited from distributing any and all work product to non-approved third parties under penalty of civil action.

DESCRIPTION:	Drainage 2472x36 Rect. Bottom Section Knockout CASTING DRAWING		REV: B-1
PART NUMBER:	200035951	DRAWN BY:	C.Flores
CREATED:	5/29/2019	MODIFIED:	9/18/2023
			SHEET: 2 OF 2

200035951.idw