NOTES

- IN COMPLIANCE WITH UNIFORM PLUMBING CODE (UPC), INTERNATIONAL PLUMBING CODE (IPC), AND STRUCTURAL LOADING REQUIREMENTS OF ASTM INTERNATIONAL.
- JENSEN PRECAST'S PRODUCT IS LISTED BY IAPMO R&T TO STANDARD Z1001. MODEL JZ-4000-EBE-SO
- MINIMUM ONE (1) ACCESS OPENING PER COMPARTMENT REQUIRED (AS SHOWN). ADDITIONAL ACCESS CAN BE ADDED IN LIEU OF PLUG COVER WHEN REQUIRED BY THE AUTHORITY HAVING JURISDICITON.
- MUST BE INSTALLED PER "JENSEN PRECAST UNDERGROUND WASTEWATER PRECAST CONCRETE TANK INSTALLATION PROCEDURE" WHICH CAN BE FOUND AT https://www.jensenprecast.com/Tank-Installation-Procedure-d2106.pdf. THIS PROCEDURE ADDRESSES REQUIRED EXCAVATION, SITE PREPARATION, INSTALLATION, VENTILATION, AND WATER/VACCUM TESTING

BILL OF MATERIALS

ITEM	QTY	PART NUMBER	DESCRIPTION	WEIGHT (LBS)
1	1	200016148	Tank JZ 4000 Gallon 4 Inch Rect. Bottom Section Single Baffle	23005
2	1	200011223	Tank JZ 4000/5000 Gallon x 8 Slab Top 24"E, 24"B, 24"E	11475
3	1	200049467	200034048 Plumbing - JZ 4000 4 Inch Sand-Oil Interceptor 24"E, 24"B, 24"E Single Baffle	8
4	4	100013648	SEALANT JOINT BUTYL RUBBER ASTM C-990 AND M198 CS-102 1IN EQUIV X14.5FT PER ROLL	0
5	JOB SPECIFIC	100005850	CI RINGCOVER 24DIA B-5105-02/B-5105-R2 ASTM A48 CL35B CP O-RING GASKET OSI JENSEN/INTERCEPT	196
6	JOB SPECIFIC	100001524	Grade Ring D2432x3	87
7	JOB SPECIFIC	100001525	Grade Ring D2432x6	180
8	JOB SPECIFIC	100001526	Grade Ring D2432x12	365
9	JOB SPECIFIC	100012046	Plug Cover D2428x6 Slab Top	300

200034048.idw

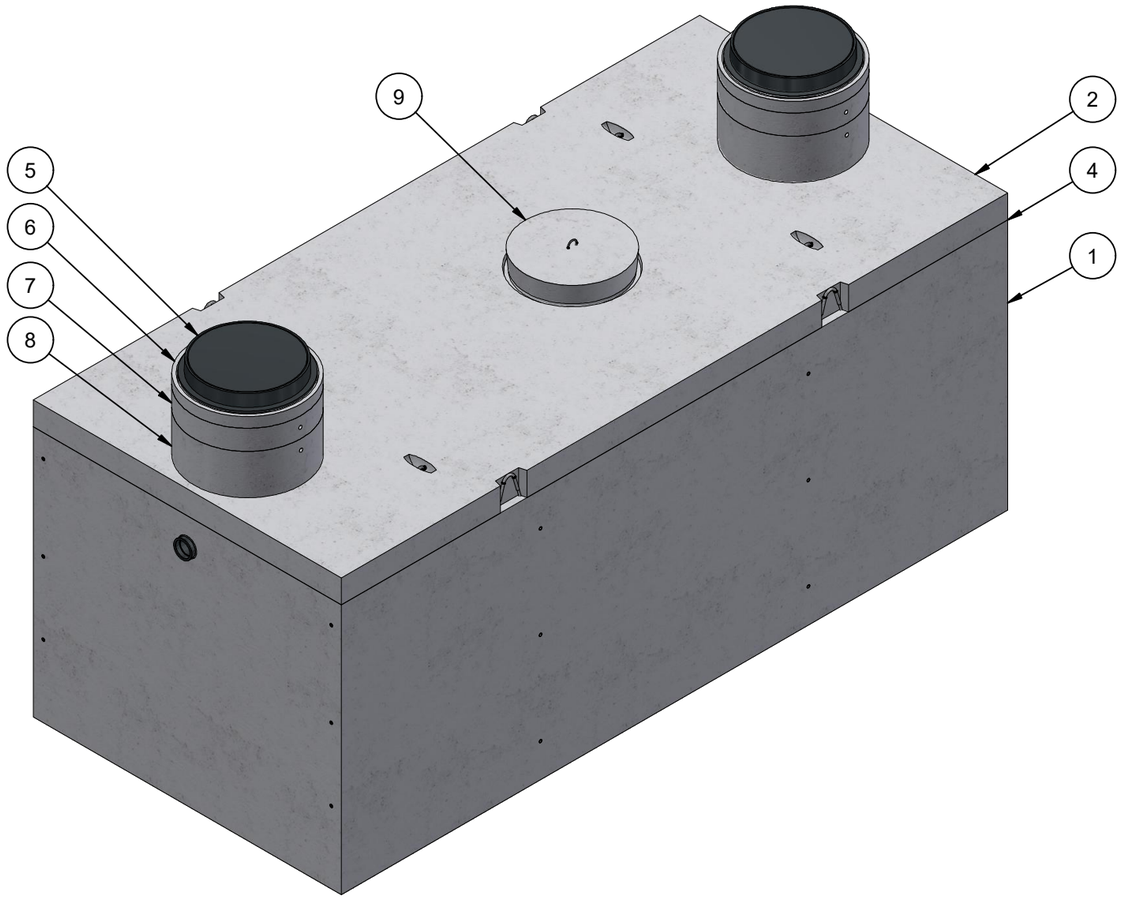

ISO LAYOUT

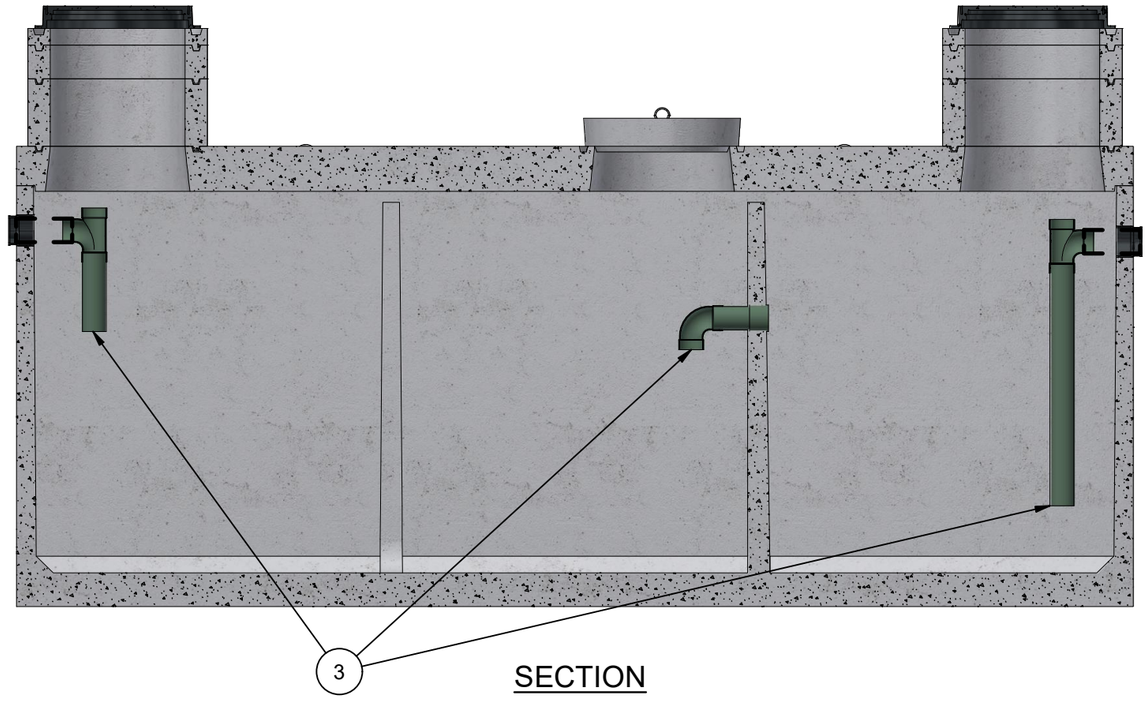

SECTION

MODEL:
JZ-4000-EBE-SO

REVISION HISTORY

REV	DESCRIPTION	DATE	BY
A	DRAWING CREATED	1/3/2020	J. Hillman
B	TOP SLAB LIFTING UPDATED; PLUMBING UPDATED	2/24/2021	T.Larson
C	THREADED INSERTS AND BAFFLE WALL NOTCH FIXED	4/29/2022	E.FINE
D	ACCESSORIES UPDATED	8/4/2022	E.FINE

BURY DEPTH:	1.1' - 5.0' to Top		
WATER LEVEL:	Below Structure	WEIGHT:	36444.06 Lbs
DESIGN SPEC:	ASTM C890,ACI 318	LOADING SPEC:	A-16 (AASHTO HS20-44)
REINFORCEMENT TYPE:		LIFTING TYPE:	

JENSEN PRECAST EST. 1968

WWW.JENSENPRECAST.COM

©2018 Jensen Precast- All rights reserved.
All materials appearing as Jensen Precast documents and the like are proprietary work product and are protected under U.S. copyright and other laws.
Unless in conjunction with business conducted with Jensen Precast, any use of Jensen Precast work product without express, written consent is prohibited, and recipient is prohibited from distributing any and all work product to non-approved third parties under penalty of civil action.

DESCRIPTION:
Tank JZ 4000 Gallon 4 Inch Layout Sand-Oil Interceptors 24"E, 24"B, 24"E Single Baffle
LAYOUT REVIEW

REV: C-4

PART NUMBER:	200034048	DRAWN BY:	E. Fine
CREATED:	1/31/2019	MODIFIED:	8/4/2022

SHEET: 1 OF 2

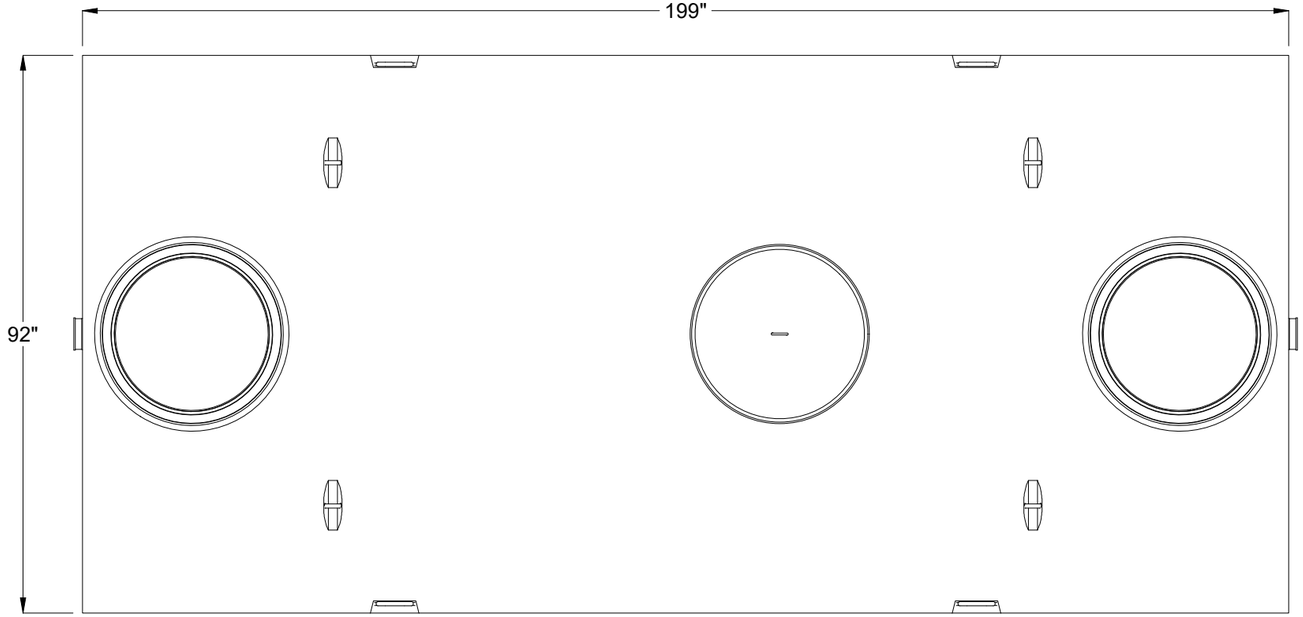

PLAN VIEW

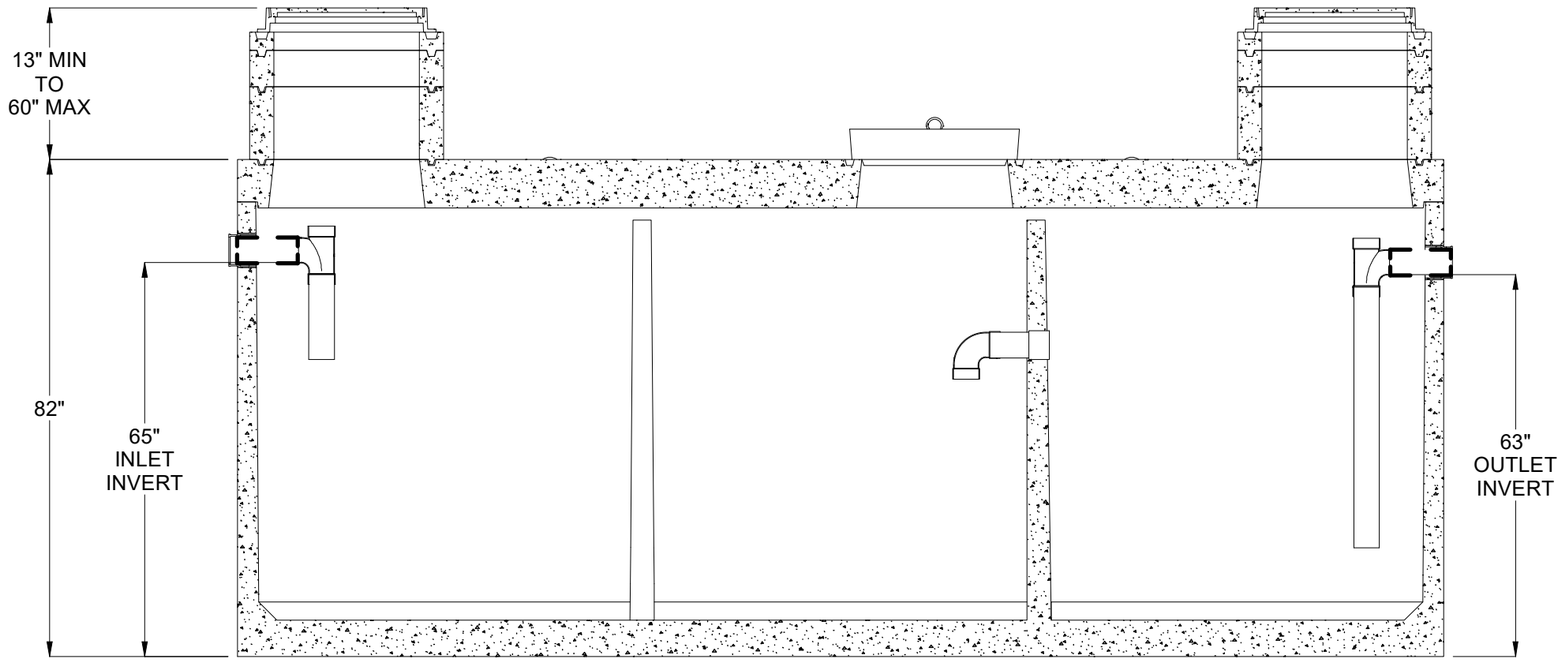

CROSS SECTION

BURY DEPTH:	1.1' - 5.0' to Top			DESCRIPTION: Tank JZ 4000 Gallon 4 Inch Layout Sand-Oil Interceptors 24"E, 24"B, 24"E Single Baffle LAYOUT DRAWING	REV: C-4
WATER LEVEL:	Below Structure	WEIGHT:	36444.06 Lbs		
DESIGN SPEC:	ASTM C890,ACI 318	LOADING SPEC:	A-16 (AASHTO HS20-44)	PART NUMBER: 200034048 / DRAWN BY: E. Fine	SHEET: 2 OF 2
REINFORCEMENT TYPE:		LIFTING TYPE:		CREATED: 1/31/2019 / MODIFIED: 8/4/2022	

JENSEN PRECAST EST. 1968

WWW.JENSENPRECAST.COM

©2018 Jensen Precast- All rights reserved.
All materials appearing as Jensen Precast documents and the like are proprietary work product and are protected under U.S. copyright and other laws.
Unless in conjunction with business conducted with Jensen Precast, any use of Jensen Precast work product without express, written consent is prohibited, and recipient is prohibited from distributing any and all work product to non-approved third parties under penalty of civil action.

200034048.idw