NOTES
■ IN COMPLIANCE WITH UNIFORM PLUMBING CODE (UPC), INTERNATIONAL PLUMBING CODE (IPC), ASTM INTERNATIONAL.
■ LOAD CONDITION 1: H-20 TRAFFIC WITH DRY SOIL CONDITIONS (WATER LEVEL BELOW TANK) AND 13 INCHES TO 14 FEET OF SOIL COVER.
■ LOAD CONDITION 2: H-20 TRAFFIC WITH WATER LEVEL 2 FEET BELOW GRADE AND 13 INCHES TO 9 FEET OF SOIL COVER
■ PROPERTIES SHOWN ARE FOR LOAD CONDITION 1.
■ MINIMUM ONE (1) ACCESS OPENING PER COMPARTMENT REQUIRED (AS SHOWN).
■ MUST BE INSTALLED PER "JENSEN PRECAST UNDERGROUND WASTEWATER PRECAST CONCRETE TANK INSTALLATION PROCEDURE" WHICH CAN BE FOUND AT https://www.jensenprecast.com/Tank-Installation-Procedure-d2106.pdf. THIS PROCEDURE ADDRESSES REQUIRED EXCAVATION, SITE PREPARATION, INSTALLATION, VENTILATION, AND WATER/VACCUM TESTING

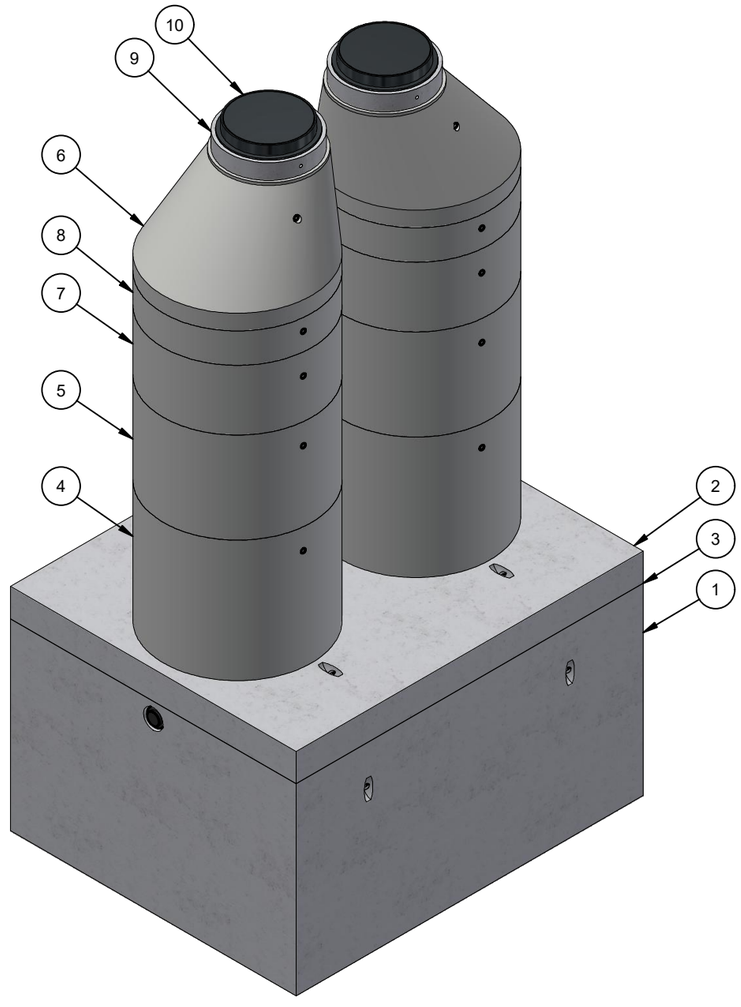

ISO LAYOUT

BILL OF MATERIALS

ITEM	QTY	PART NUMBER	DESCRIPTION	WEIGHT (LBS)
1	1	200019297	Tank MU 2500 Gallon Rect. Bottom Section HGW	32041
2	1	200019082	Tank MU 2000-3000 Gallon x 12 Slab Top 24"E, 24"E DB	14746
3	JOB SPECIFIC	100013648	SEALANT JOINT BUTYL RUBBER ASTM C-990 AND M198 CS-102 1IN EQUIV X14.5FT PER ROLL	0
4	JOB SPECIFIC	200042291	Manhole D4858x48 Barrel TU Step Holes	3457
5	JOB SPECIFIC	200042290	Manhole D4858x36 Barrel TU Step Holes	2589
6	JOB SPECIFIC	200023922	Manhole 4824 x 36 Eccentric	2212
7	JOB SPECIFIC	200042289	Manhole D4858x24 Barrel TU Step Holes	1721
8	JOB SPECIFIC	200042287	Manhole D4858x12 Barrel TU Step Holes	853
9	JOB SPECIFIC	100001525	Grade Ring D2432x6	180
10	JOB SPECIFIC	100005850	CI RINGCOVER 24DIA B-5105-02/B-5105-R2 ASTM A48 CL35B CP O-RING GASKET OSI JENSEN/INTERCEPT	196
11	JOB SPECIFIC	100012046	Plug Cover D2428x6 Slab Top	300
12	JOB SPECIFIC	100002561	LADDER STEP RUNG POLYMER MH ASTM-C-478 9-3/16 X 13IN PS2-PF-DF	11

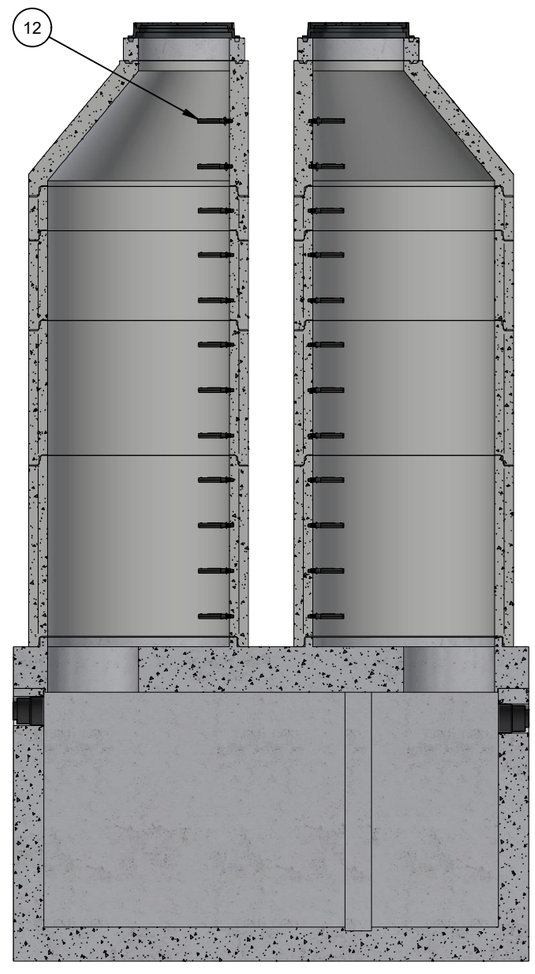

SECTION VIEW

CHANGE HISTORY			
REV	DESCRIPTION	DATE	BY
A	DRAWING CREATED	12/18/2019	T.Larson
B	TOP SLAB & BASE UPDATED	3/15/2021	T.Larson
C	ACCESSORIES UPDATED	8/3/2022	E.FINE
D	ACCESSORIES UPDATED	6/27/2023	C.Flores

BURY DEPTH:	1.1' - 14.0' to Top		
WATER LEVEL:	Below Structure	WEIGHT:	69756.77 Lbs
DESIGN SPEC:	ACI 318,ASTM C890	LOADING SPEC:	A-16 (AASHTO HS20-44)
AGENCY:		AGENCY SPEC:	

JENSEN PRECAST EST. 1968

WWW.JENSENPRECAST.COM

©2018 Jensen Precast- All rights reserved.
All materials appearing as Jensen Precast documents and the like are proprietary work product and are protected under U.S. copyright and other laws.
Unless in conjunction with business conducted with Jensen Precast, any use of Jensen Precast work product without express, written consent is prohibited, and recipient is prohibited from distributing any and all work product to non-approved third parties under penalty of civil action.

DESCRIPTION: Tank MU 2500 Gallon 6 Inch Layout Holding Tank 24"E, 24"E MH Access No Baffle DB LAYOUT REVIEW			REV: D-2
PART NUMBER:	200033789	DRAWN BY:	C.Flores
CREATED:	1/24/2019	MODIFIED:	6/27/2023
			SHEET: 1 OF 2

200033789.idw

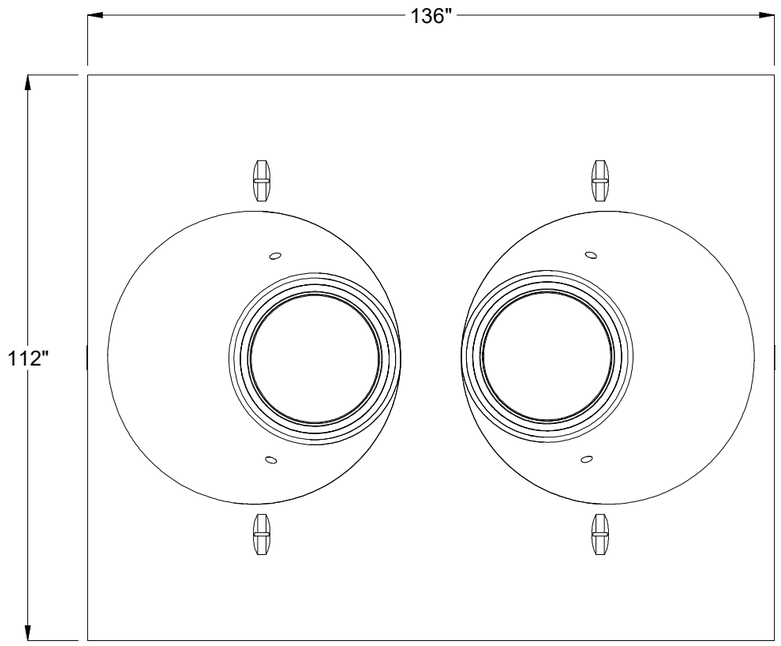

PLAN VIEW

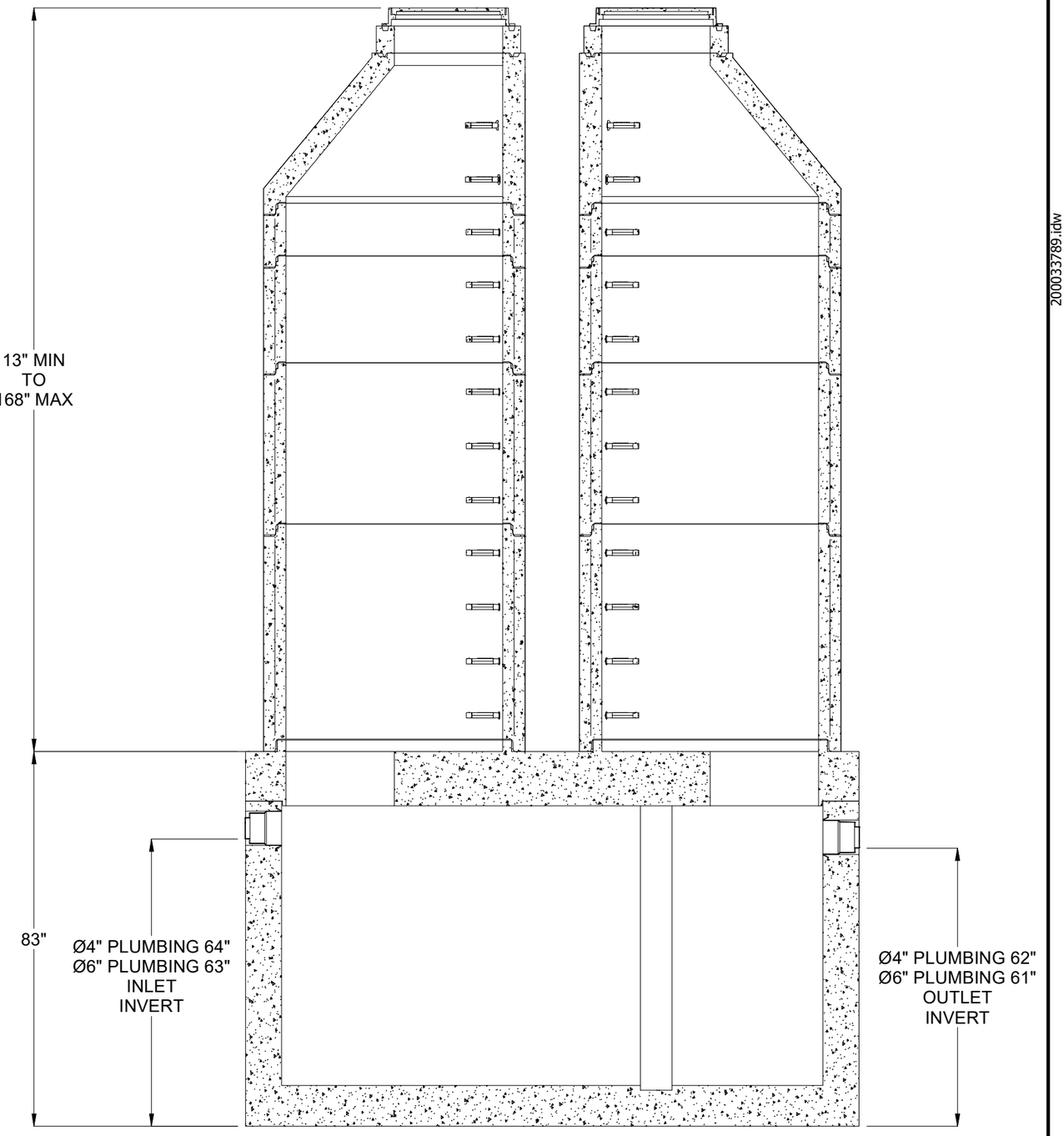

CROSS SECTION

200033789.idw

BURY DEPTH:	1.1' - 14.0' to Top		
WATER LEVEL:	Below Structure	WEIGHT:	69756.77 Lbs
DESIGN SPEC:	ACI 318,ASTM C890	LOADING SPEC:	A-16 (AASHTO HS20-44)
AGENCY:		AGENCY SPEC:	

JENSEN PRECAST EST. 1968

WWW.JENSENPRECAST.COM

©2018 Jensen Precast- All rights reserved.
All materials appearing as Jensen Precast documents and the like are proprietary work product and are protected under U.S. copyright and other laws.
Unless in conjunction with business conducted with Jensen Precast, any use of Jensen Precast work product without express, written consent is prohibited, and recipient is prohibited from distributing any and all work product to non-approved third parties under penalty of civil action.

DESCRIPTION:
Tank MU 2500 Gallon 6 Inch Layout Holding Tank 24"E, 24"E MH Access No Baffle DB
LAYOUT DRAWING

PART NUMBER:	200033789	DRAWN BY:	C.Flores
CREATED:	1/24/2019	MODIFIED:	6/27/2023

REV: D-2

SHEET: 2 OF 2