NOTES
■ IN COMPLIANCE WITH UNIFORM PLUMBING CODE (UPC), INTERNATIONAL PLUMBING CODE (IPC), ASTM INTERNATIONAL.
■ LOAD CONDITION 1: H-20 TRAFFIC WITH DRY SOIL CONDITIONS (WATER LEVEL BELOW TANK) AND 13 INCHES TO 14 FEET OF SOIL COVER.
■ LOAD CONDITION 2: H-20 TRAFFIC WITH WATER LEVEL 2 FEET BELOW GRADE AND 13 INCHES TO 9 FEET OF SOIL COVER
■ PROPERTIES SHOWN ARE FOR LOAD CONDITION 2.
■ MINIMUM ONE (1) ACCESS OPENING PER COMPARTMENT REQUIRED (AS SHOWN).
■ MUST BE INSTALLED PER "JENSEN PRECAST UNDERGROUND WASTEWATER PRECAST CONCRETE TANK INSTALLATION PROCEDURE" WHICH CAN BE FOUND AT https://www.jensenprecast.com/Tank-Installation-Procedure-d2106.pdf. THIS PROCEDURE ADDRESSES REQUIRED EXCAVATION, SITE PREPARATION, INSTALLATION, VENTILATION, AND WATER/VACCUM TESTING

BILL OF MATERIALS

ITEM	QTY	PART NUMBER	DESCRIPTION	WEIGHT (LBS)
1	1	200050069	Tank MU 750 Gallon 6 Inch Assembly 24"E, 24"E GR Access No Baffle HGW	17361
2	JOB SPECIFIC	100005850	CI RINGCOVER 24DIA B-5105-02/B-5105-R2 ASTM A48 CL35B CP O-RING GASKET OSI JENSEN/INTERCEPT	196
3	JOB SPECIFIC	100001524	Grade Ring D2432x3	87
4	JOB SPECIFIC	100001525	Grade Ring D2432x6	180
5	JOB SPECIFIC	100001526	Grade Ring D2432x12	365
6	JOB SPECIFIC	100012046	Plug Cover D2428x6 Slab Top	300

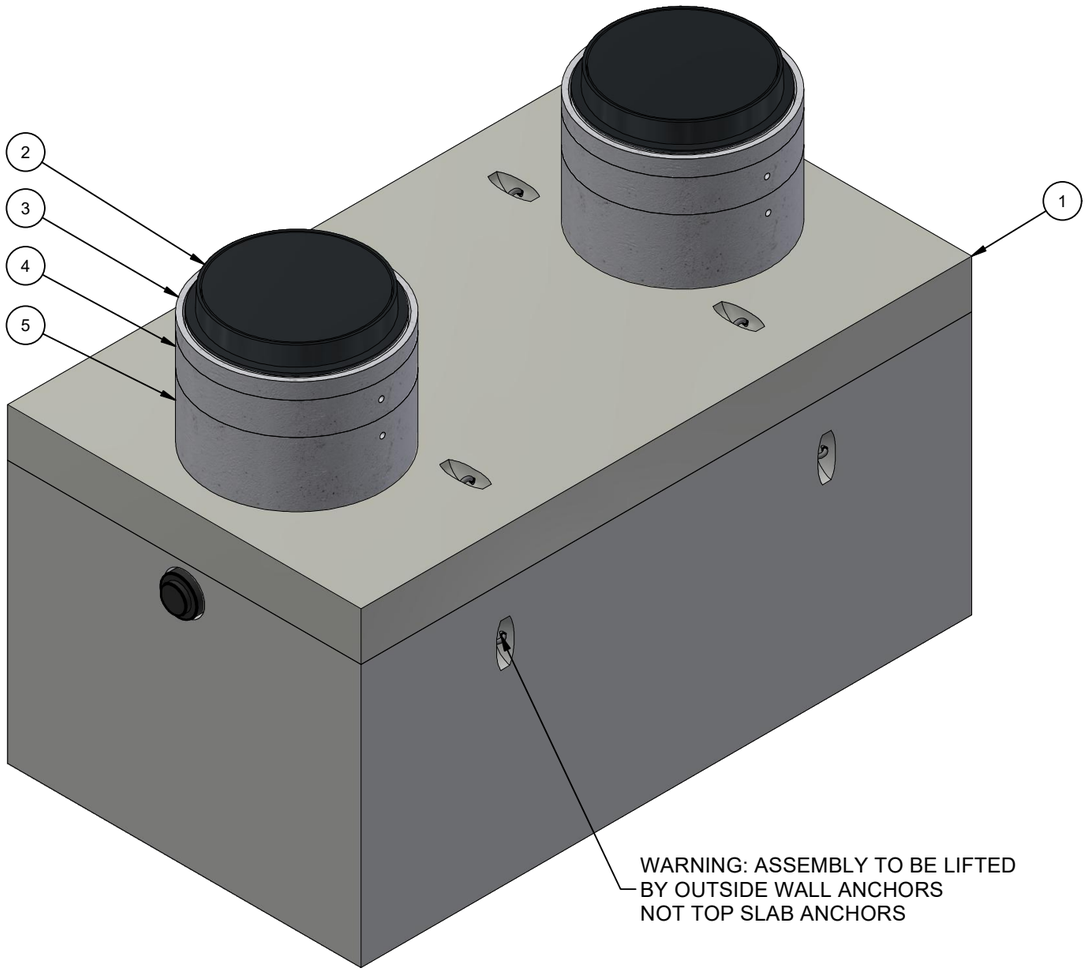

ISO LAYOUT



SECTION VIEW

CHANGE HISTORY			
REV	DESCRIPTION	DATE	BY
A	DRAWING CREATED	8/9/2019	T.Larson
B	TOP SLAB & BASE UPDATED	3/15/2021	T.Larson
C	ACCESSORIES UPDATED	8/2/2022	E.FINE
D	ACCESSORIES UPDATED	6/23/2023	CF

BURY DEPTH:	1.1' - 9.0' to Top		
WATER LEVEL:	2.0'	WEIGHT:	19317.65 Lbs
DESIGN SPEC:	ACI 318,ASTM C890	LOADING SPEC:	A-16 (AASHTO HS20-44)
AGENCY:		AGENCY SPEC:	

JENSEN PRECAST EST. 1968

WWW.JENSENPRECAST.COM

©2018 Jensen Precast- All rights reserved.
All materials appearing as Jensen Precast documents and the like are proprietary work product and are protected under U.S. copyright and other laws.
Unless in conjunction with business conducted with Jensen Precast, any use of Jensen Precast work product without express, written consent is prohibited, and recipient is prohibited from distributing any and all work product to non-approved third parties under penalty of civil action.

DESCRIPTION:	Tank MU 750 Gallon 6 Inch Layout Holding Tank 24"E, 24"E GR Access No Baffle HGW LAYOUT REVIEW		REV: D-2
PART NUMBER:	200033683	DRAWN BY:	C.Flores
CREATED:	1/24/2019	MODIFIED:	6/23/2023
			SHEET: 1 OF 2

200033683.idw

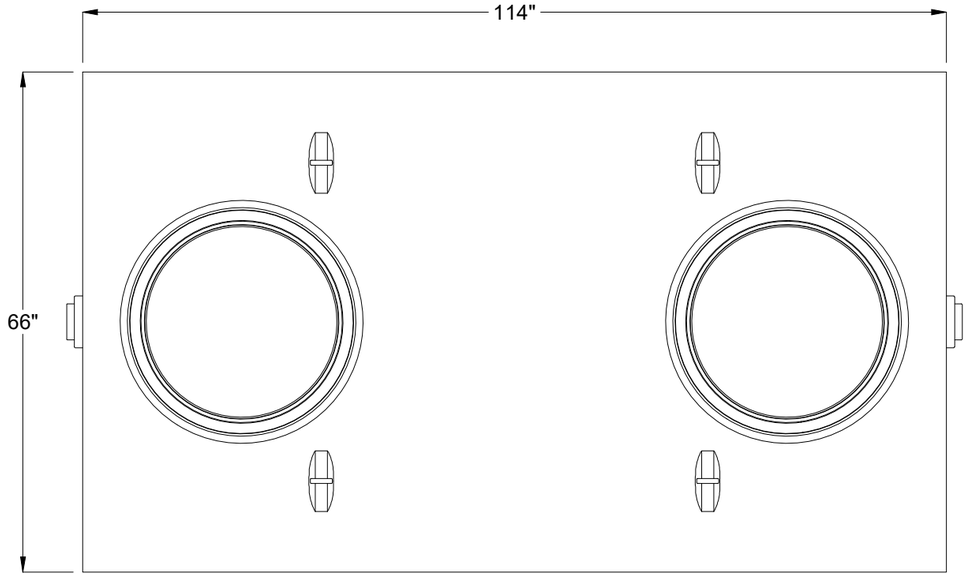

PLAN VIEW

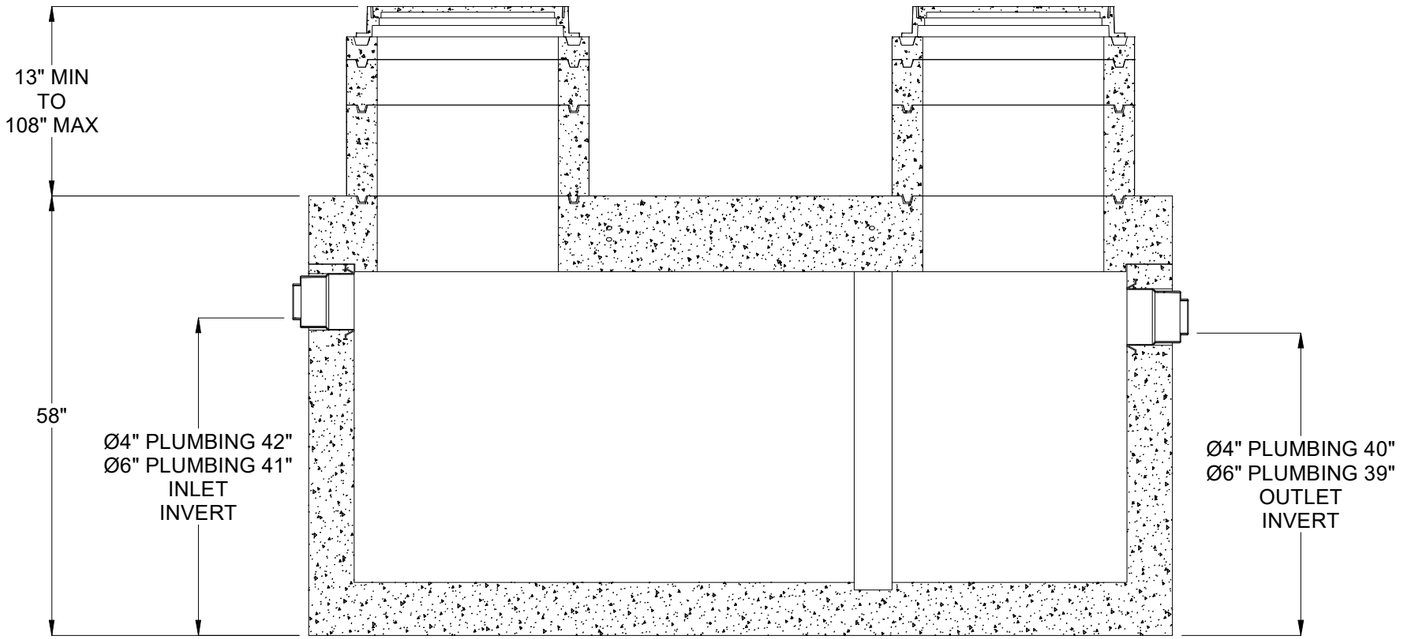

CROSS SECTION

BURY DEPTH:	1.1' - 9.0' to Top		
WATER LEVEL:	2.0'	WEIGHT:	19317.65 Lbs
DESIGN SPEC:	ACI 318,ASTM C890	LOADING SPEC:	A-16 (AASHTO HS20-44)
AGENCY:		AGENCY SPEC:	

JENSEN PRECAST EST. 1968

WWW.JENSENPRECAST.COM

©2018 Jensen Precast- All rights reserved.
All materials appearing as Jensen Precast documents and the like are proprietary work product and are protected under U.S. copyright and other laws.
Unless in conjunction with business conducted with Jensen Precast, any use of Jensen Precast work product without express, written consent is prohibited, and recipient is prohibited from distributing any and all work product to non-approved third parties under penalty of civil action.

DESCRIPTION:	Tank MU 750 Gallon 6 Inch Layout Holding Tank 24"E, 24"E GR Access No Baffle HGW LAYOUT DRAWING		REV: D-2
PART NUMBER:	200033683	DRAWN BY:	C.Flores
CREATED:	1/24/2019	MODIFIED:	6/23/2023
			SHEET: 2 OF 2

200033683.idw