NOTES
■ IN COMPLIANCE WITH UNIFORM PLUMBING CODE (UPC), INTERNATIONAL PLUMBING CODE (IPC), AND STRUCTURAL LOADING REQUIREMENTS OF ASTM INTERNATIONAL.
■ MINIMUM ONE (1) ACCESS OPENING PER COMPARTMENT REQUIRED (AS SHOWN).
■ MUST BE INSTALLED PER "JENSEN PRECAST UNDERGROUND WASTEWATER PRECAST CONCRETE TANK INSTALLATION PROCEDURE" WHICH CAN BE FOUND AT https://www.jensenprecast.com/Tank-Installation-Procedure-d2106.pdf. THIS PROCEDURE ADDRESSES REQUIRED EXCAVATION, SITE PREPARATION, INSTALLATION, VENTILATION, AND WATER/VACCUM TESTING

BILL OF MATERIALS

ITEM	QTY	PART NUMBER	DESCRIPTION	WEIGHT (LBS)
1	1	200026241	Tank JZ 4000 Gallon 6 Inch Rect. Bottom Section No Baffle	21367
2	1	200014700	Tank JZ 4000/5000 Gallon x 7 Slab Top 24 EE	11823
3	4	100013648	SEALANT JOINT BUTYL RUBBER ASTM C-990 AND M198 CS-102 1IN EQUIV X14.5FT PER ROLL	0
4	JOB SPECIFIC	100005850	CI RINGCOVER 24DIA B-5105-02/B-5105-R2 ASTM A48 CL35B CP O-RING GASKET OSI JENSEN/INTERCEPT	196
5	JOB SPECIFIC	100001524	Grade Ring D2432x3	87
6	JOB SPECIFIC	100001525	Grade Ring D2432x6	180
7	JOB SPECIFIC	100001526	Grade Ring D2432x12	365
8	JOB SPECIFIC	100012046	Plug Cover D2428x6 Slab Top	300

200033608.idw

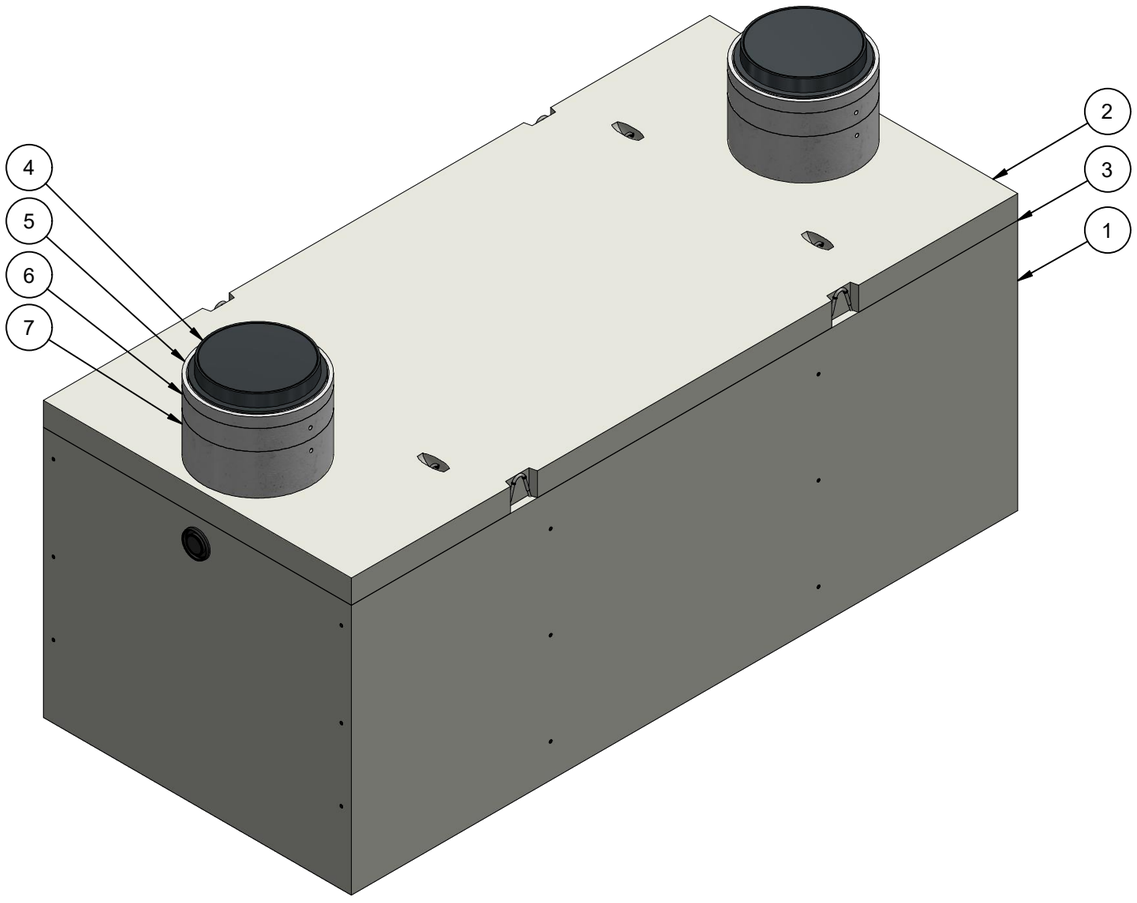

ISO LAYOUT

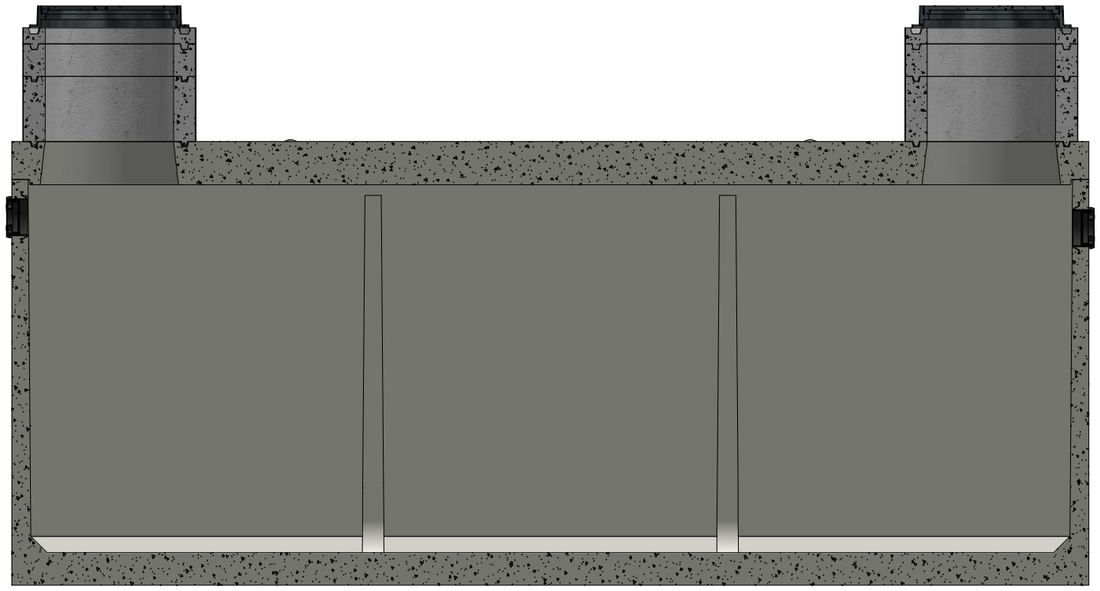

SECTION

REVISION HISTORY			
REV	DESCRIPTION	DATE	BY
A	DRAWING CREATED	10/1/2019	J HILLMAN
B	TOP SLAB LIFTING UPDATED	2/25/2021	T.Larson
C	BAFFLE SLOTS AND SIDE INSERTS UPDATED	11/22/2021	T.Larson
D	ACCESSORIES UPDATED	7/8/2022	E.FINE

BURY DEPTH:	1.1' - 5.0' to Top		
WATER LEVEL:	Below Structure	WEIGHT:	35146.05 Lbs
DESIGN SPEC:	ASTM C890,ACI 318	LOADING SPEC:	A-16 (AASHTO HS20-44)
REINFORCEMENT TYPE:		LIFTING TYPE:	

JENSEN PRECAST EST. 1968

WWW.JENSENPRECAST.COM

©2018 Jensen Precast- All rights reserved.
All materials appearing as Jensen Precast documents and the like are proprietary work product and are protected under U.S. copyright and other laws.
Unless in conjunction with business conducted with Jensen Precast, any use of Jensen Precast work product without express, written consent is prohibited, and recipient is prohibited from distributing any and all work product to non-approved third parties under penalty of civil action.

DESCRIPTION:	Tank JZ 4000 Gallon 6 Inch Layout Holding Tank 24"E, 24"E No Baffle LAYOUT REVIEW		REV: D-5
PART NUMBER:	200033608	DRAWN BY:	E. Fine
CREATED:	1/31/2019	MODIFIED:	7/8/2022
			SHEET: 1 OF 2

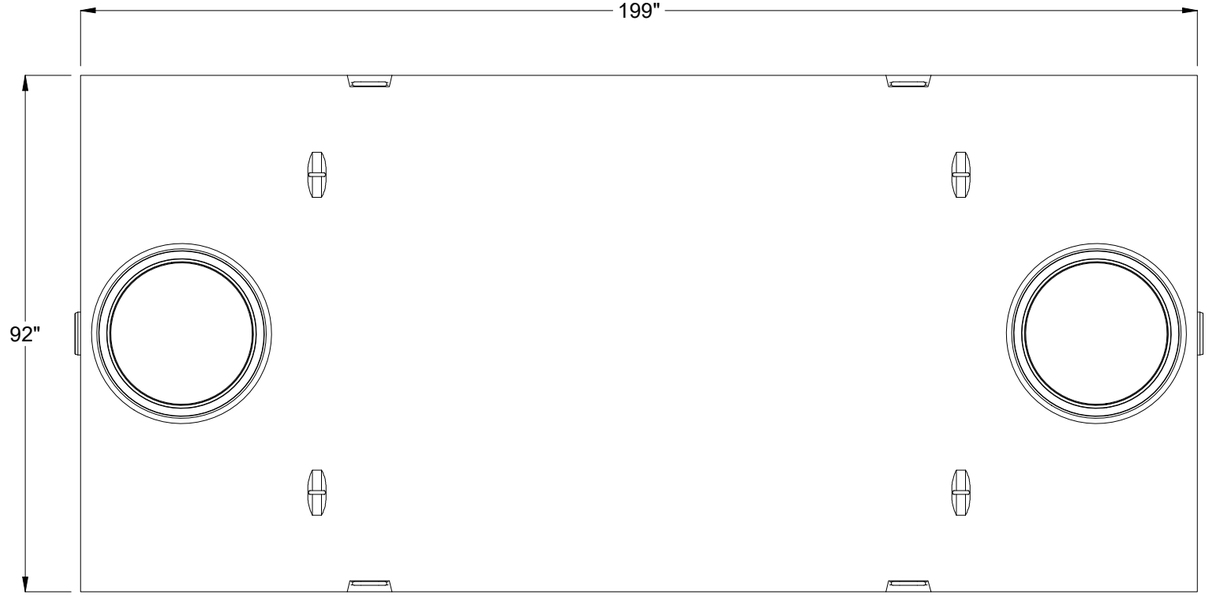

PLAN VIEW

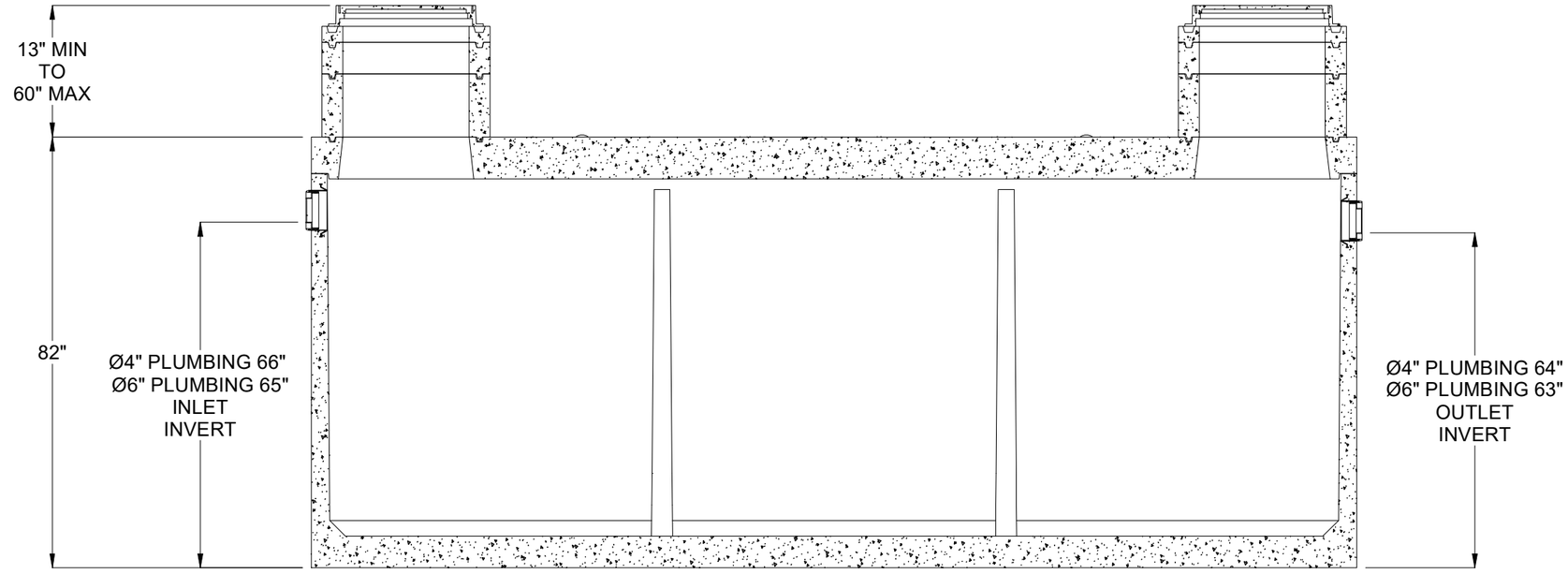

CROSS SECTION

BURY DEPTH:	1.1' - 5.0' to Top		
WATER LEVEL:	Below Structure	WEIGHT:	35146.05 Lbs
DESIGN SPEC:	ASTM C890,ACI 318	LOADING SPEC:	A-16 (AASHTO HS20-44)
REINFORCEMENT TYPE:		LIFTING TYPE:	

JENSEN PRECAST EST. 1968

WWW.JENSENPRECAST.COM

©2018 Jensen Precast- All rights reserved.
All materials appearing as Jensen Precast documents and the like are proprietary work product and are protected under U.S. copyright and other laws.
Unless in conjunction with business conducted with Jensen Precast, any use of Jensen Precast work product without express, written consent is prohibited, and recipient is prohibited from distributing any and all work product to non-approved third parties under penalty of civil action.

DESCRIPTION:	Tank JZ 4000 Gallon 6 Inch Layout Holding Tank 24"E, 24"E No Baffle LAYOUT DRAWING		
PART NUMBER:	200033608	DRAWN BY:	E. Fine
CREATED:	1/31/2019	MODIFIED:	7/8/2022

REV: D-5

SHEET: 2 OF 2

200033608.idw