NOTES
■ FOR COMPLETE DESIGN AND PRODUCT INFORMATION CONTACT JENSEN PRECAST.

BILL OF MATERIALS

ITEM	QTY	PART NUMBER	DESCRIPTION
1	71.635 ft^3	100002728	CONCRETE MIX GENERIC 4000 PSI
2	1	200032408	WWR REINFORCING CAGE 200032408
3	3	100004880	ANCHOR UTILITY .671DIA 5.625-SLAB GALV P75 6UA671

ALTERNATE REINFORCING OPTIONS

PART NUMBER	DESCRIPTION
200043426	MBK WIRE REINFORCING CAGE 200043426

200032407.idw

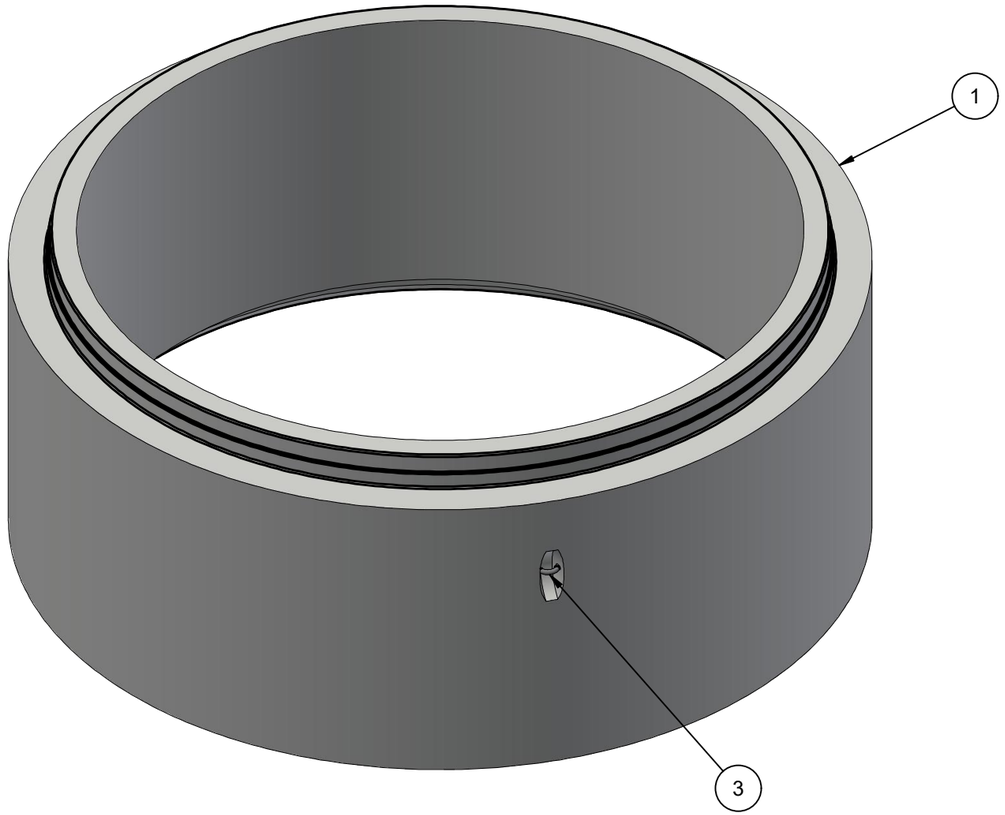

ISOMETRIC VIEW

LIFTING NOTES
■ THIS CONCRETE PRODUCT IS DESIGNED TO BE LIFTED AT 2500 PSI WITH 3 LIFT CONNECTIONS EQUALLY LOADED TO 3 LIFTING POINTS AT A MINIMUM 60° SLING ANGLE, MEASURED FROM HORIZONTAL.

BURY DEPTH:	0.0' - 99.0' to Top		
WATER LEVEL:	0.0'	WEIGHT:	10769.11 Lbs
DESIGN SPEC:	ASTM C478	LOADING SPEC:	A-16 (AASHTO HS20-44)
REINFORCEMENT TYPE:	WWR Plain	LIFTING TYPE:	A-Anchor

JENSEN PRECAST EST. 1968

WWW.JENSENPRECAST.COM

©2019 Jensen Precast- All rights reserved.
All materials appearing as Jensen Precast documents and the like are proprietary work product and are protected under U.S. copyright and other laws.
Unless in conjunction with business conducted with Jensen Precast, any use of Jensen Precast work product without express, written consent is prohibited, and recipient is prohibited from distributing any and all work product to non-approved third parties under penalty of civil action.

REVISION HISTORY

REV	DESCRIPTION	DATE	BY
A	INITIAL RELEASE	11/13/2019	
B	CHGD LIFTING TO A-ANCHORS, ADDED ALT REINFORCING	08/20/2020	VGL

DESCRIPTION:	Manhole D96114x42 Barrel TU CASTING LAYOUT		REV: B-3
PART NUMBER:	200032407	DRAWN BY:	V. Lund
CREATED:	11/13/2019	MODIFIED:	4/27/2021
			SHEET: 1 OF 2

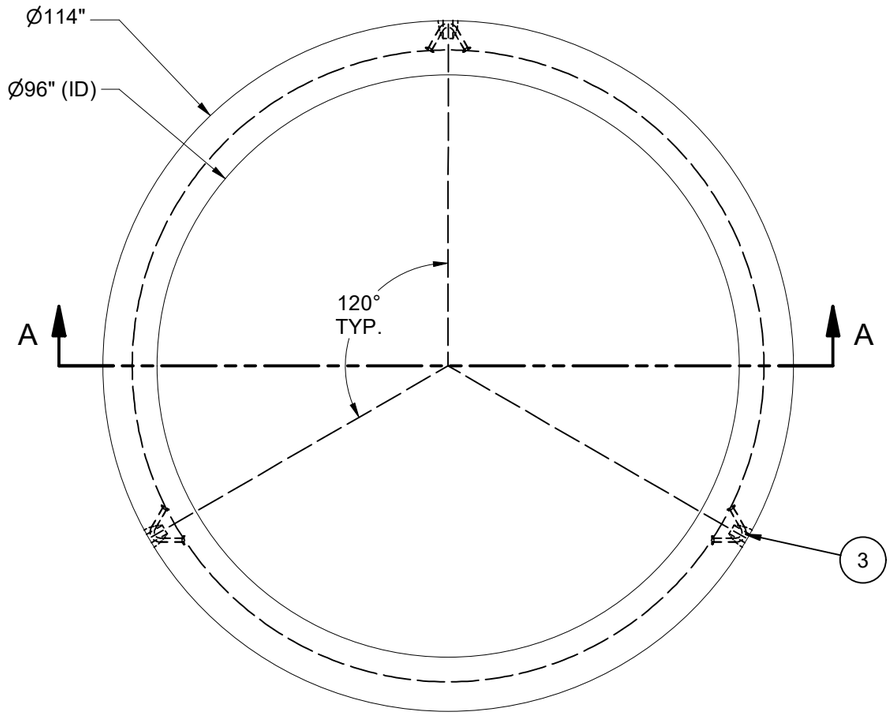

PLAN VIEW

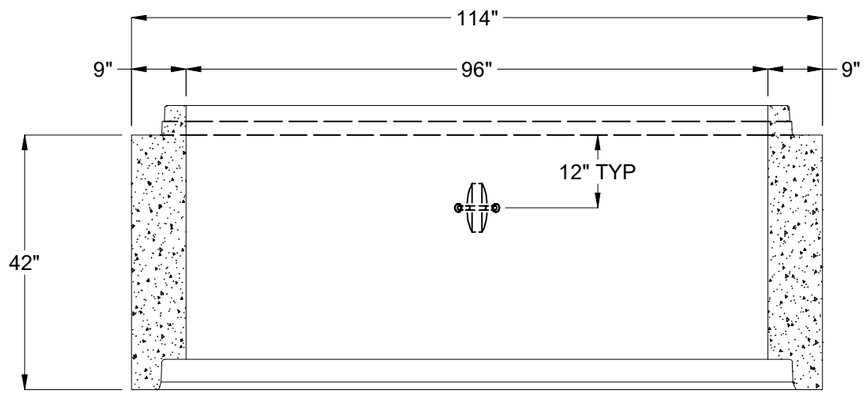

SECTION A-A

BURY DEPTH:	0.0' - 99.0' to Top		
WATER LEVEL:	0.0'	WEIGHT:	10769.11 Lbs
DESIGN SPEC:	ASTM C478	LOADING SPEC:	A-16 (AASHTO HS20-44)
REINFORCEMENT TYPE:	WWR Plain	LIFTING TYPE:	A-Anchor

JENSEN PRECAST EST. 1968

WWW.JENSENPRECAST.COM

©2019 Jensen Precast- All rights reserved.
All materials appearing as Jensen Precast documents and the like are proprietary work product and are protected under U.S. copyright and other laws.
Unless in conjunction with business conducted with Jensen Precast, any use of Jensen Precast work product without express, written consent is prohibited, and recipient is prohibited from distributing any and all work product to non-approved third parties under penalty of civil action.

DESCRIPTION:	Manhole D96114x42 Barrel TU CASTING DRAWING		REV: B-3
PART NUMBER:	200032407	DRAWN BY:	V. Lund
CREATED:	11/13/2019	MODIFIED:	4/27/2021
			SHEET: 2 OF 2

200032407.idw