NOTES
■ FOR COMPLETE DESIGN AND PRODUCT INFORMATION CONTACT JENSEN PRECAST.

BILL OF MATERIALS

ITEM	UNIT QTY	QTY	PART NUMBER	DESCRIPTION
1	81.050 ft^3	81.050 ft^3	100011425	CONCRETE MIX GENERIC 5000 PSI
2	1	1	300123331	REINFORCING MAT 300123331
3	1	8	100002872	ANCHOR DOGBONE P52 4T X 3-3/4" GALV

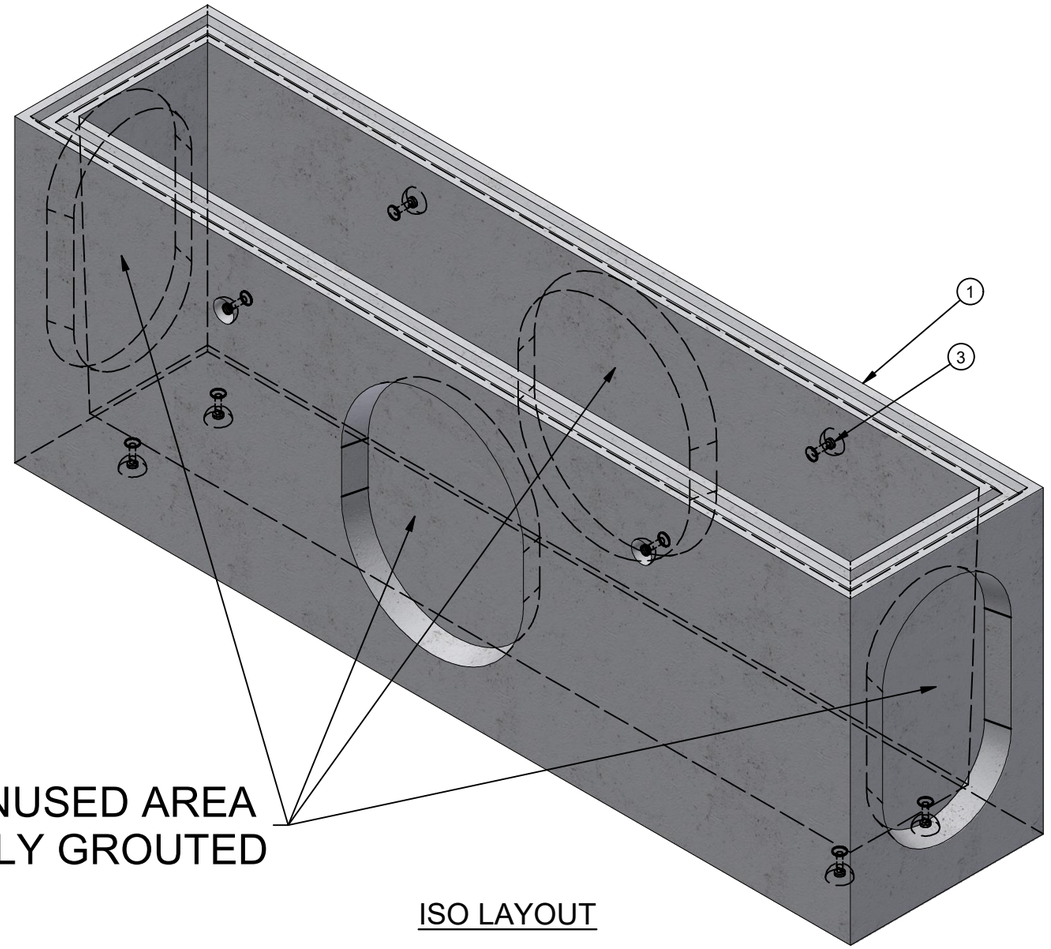

NOTE: ALL UNUSED AREA
SHOULD BE FULLY GROUTED

ISO LAYOUT

200032375.idw

LIFTING NOTES
■ THIS CONCRETE PRODUCT IS DESIGNED TO BE LIFTED AT 2500 PSI WITH 4 LIFT CONNECTIONS EQUALLY LOADED TO 4 LIFTING POINTS AT A MINIMUM 90° SLING ANGLE, MEASURED FROM HORIZONTAL.

BURY DEPTH:	Maximum 9.0' to Inside Floor		
WATER LEVEL:	5.0'	WEIGHT:	12187.64 Lbs
DESIGN SPEC:	ASTM C890,ACI 318	LOADING SPEC:	A-16 (AASHTO HS20-44)
REINFORCEMENT TYPE:	Rebar	LIFTING TYPE:	Dogbone

JENSEN PRECAST EST. 1968

WWW.JENSENPRECAST.COM

©2019 Jensen Precast- All rights reserved.
All materials appearing as Jensen Precast documents and the like are proprietary work product and are protected under U.S. copyright and other laws.
Unless in conjunction with business conducted with Jensen Precast, any use of Jensen Precast work product without express, written consent is prohibited, and recipient is prohibited from distributing any and all work product to non-approved third parties under penalty of civil action.

REVISION HISTORY			
REV	DESCRIPTION	DATE	BY
A	INITIAL RELEASE - 1905-17489-NNV	11/13/2019	VGL

DESCRIPTION:	Drop Inlet 24144x48 Rect. Bottom Section Flat Thinwall CASTING LAYOUT			REV: A
PART NUMBER:	200032375	DRAWN BY:	V. Lund	SHEET: 1 OF 2
CREATED:	5/29/2019	MODIFIED:	2/3/2020	

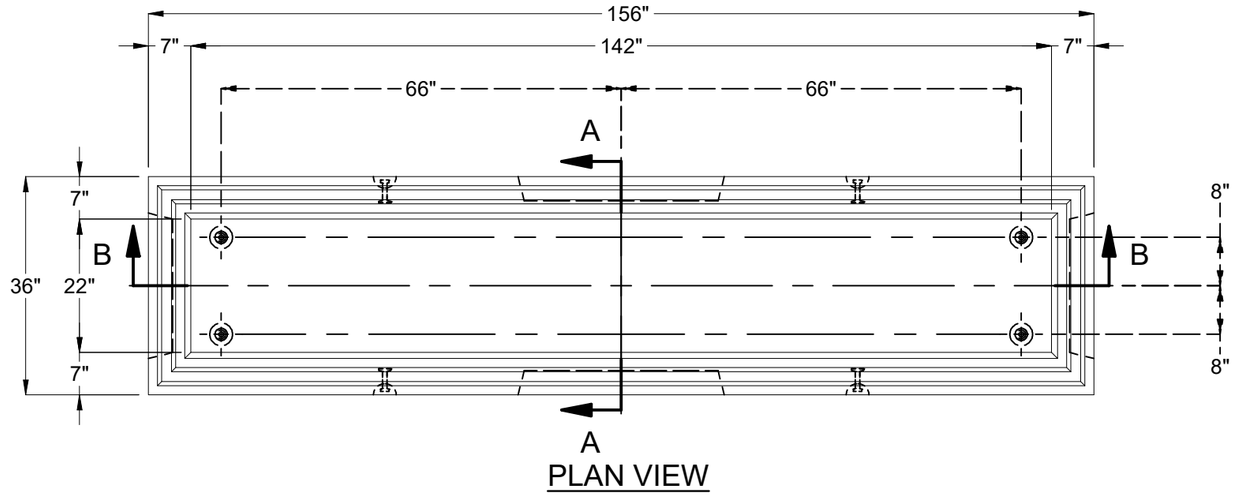

PLAN VIEW

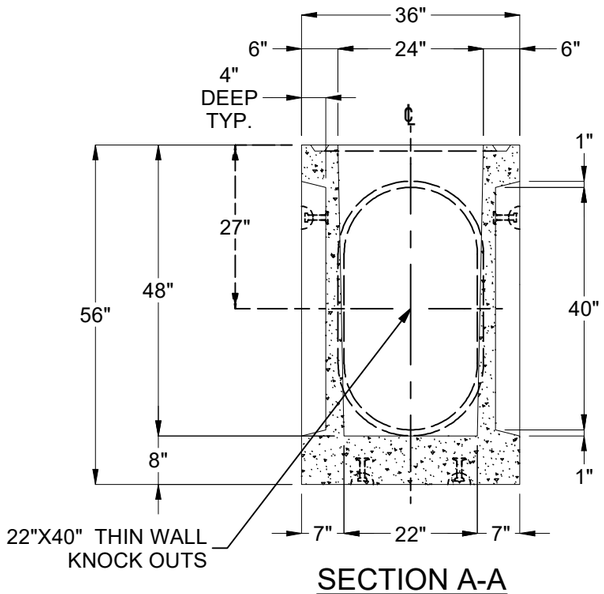

SECTION A-A
(TYPICAL BOTH SIDES)

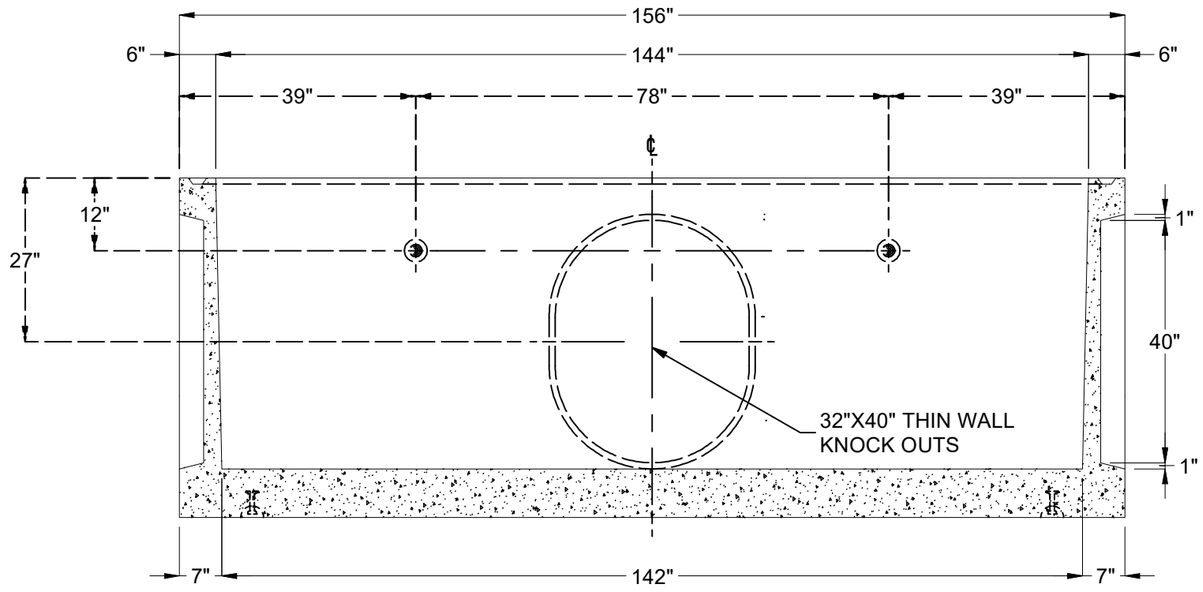

SECTION B-B
(TYPICAL BOTH SIDES)

BURY DEPTH:	Maximum 9.0' to Inside Floor		
WATER LEVEL:	5.0'	WEIGHT:	12216.53 Lbs
DESIGN SPEC:	ASTM C890,ACI 318	LOADING SPEC:	A-16 (AASHTO HS20-44)
REINFORCEMENT TYPE:	Rebar	LIFTING TYPE:	Dogbone

JENSEN PRECAST EST. 1968

WWW.JENSENPRECAST.COM

©2019 Jensen Precast- All rights reserved.
All materials appearing as Jensen Precast documents and the like are proprietary work product and are protected under U.S. copyright and other laws.
Unless in conjunction with business conducted with Jensen Precast, any use of Jensen Precast work product without express, written consent is prohibited, and recipient is prohibited from distributing any and all work product to non-approved third parties under penalty of civil action.

DESCRIPTION:	Drop Inlet 24144x48 Rect. Bottom Section Flat Thinwall CASTING DRAWING		REV: A
PART NUMBER:	200032375	DRAWN BY:	V. Lund
CREATED:	5/29/2019	MODIFIED:	2/3/2020
			SHEET: 2 OF 2

200032375.idw