| NOTES |
|---|
| ■ FOR COMPLETE DESIGN AND PRODUCT INFORMATION CONTACT JENSEN PRECAST. |

## BILL OF MATERIALS

| ITEM | UNIT QTY | QTY | PART NUMBER | DESCRIPTION |
|---|---|---|---|---|
| 1 | 62.145 ft^3 | 62.145 ft^3 | 100011425 | CONCRETE MIX GENERIC 5000 PSI |
| 2 | 1 | 1 | 300123329 | REINFORCING MAT 300123329 |
| 3 | 1 | 8 | 100002872 | ANCHOR DOGBONE P52 4T X 3-3/4" GALV |

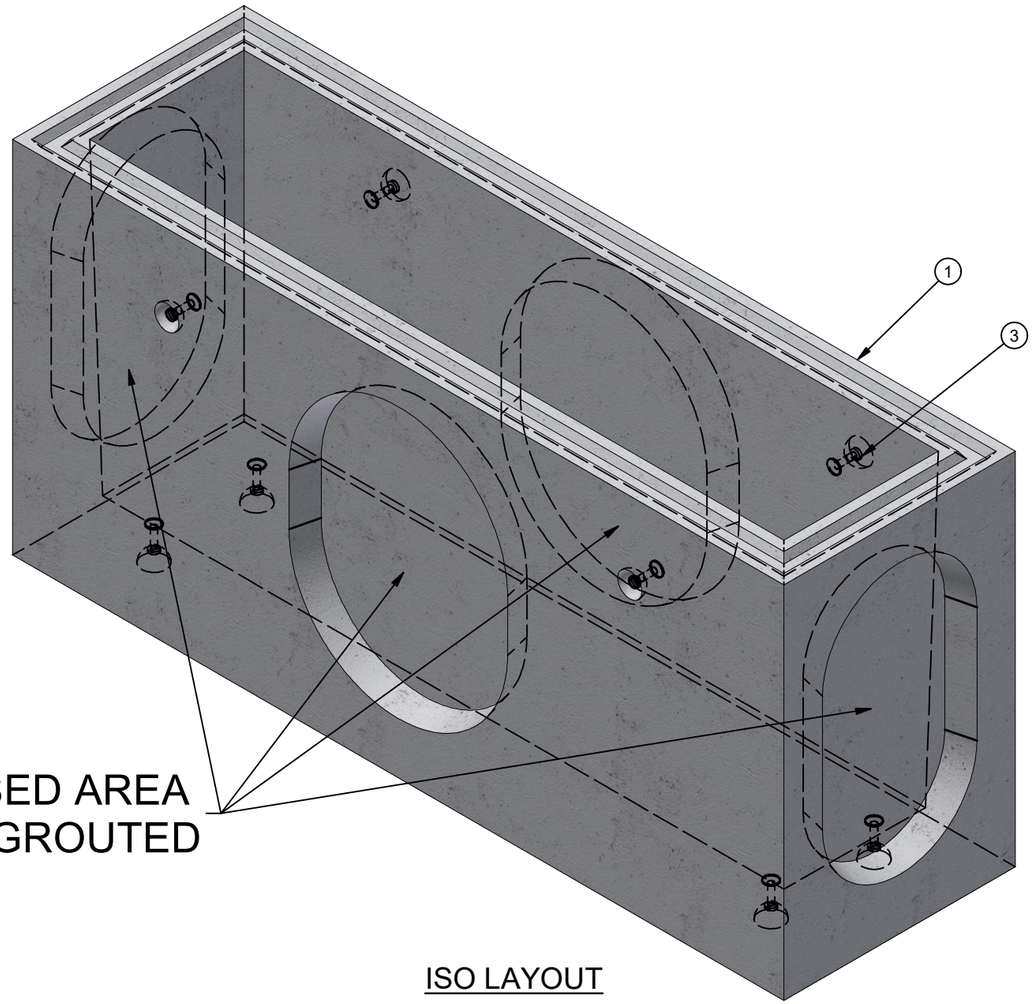


NOTE: ALL UNUSED AREA
SHOULD BE FULLY GROUTED

ISO LAYOUT

200032210.idw

| LIFTING NOTES |
|---|
| ■ THIS CONCRETE PRODUCT IS DESIGNED TO BE LIFTED AT 2000 PSI WITH 4 LIFT CONNECTIONS EQUALLY LOADED TO 4 LIFTING POINTS AT A MINIMUM 90° SLING ANGLE, MEASURED FROM HORIZONTAL. |

| | | | |
|---|---|---|---|
| BURY DEPTH: | Maximum 9.0' to Inside Floor | | |
| WATER LEVEL: | 5.0' | WEIGHT: | 9375.44 Lbs |
| DESIGN SPEC: | ASTM C890,ACI 318 | LOADING SPEC: | A-16 (AASHTO HS20-44) |
| REINFORCEMENT TYPE: | Rebar | LIFTING TYPE: | Dogbone |

JENSEN PRECAST EST. 1968

WWW.JENSENPRECAST.COM

©2019 Jensen Precast- All rights reserved.
All materials appearing as Jensen Precast documents and the like are proprietary work product and are protected under U.S. copyright and other laws.
Unless in conjunction with business conducted with Jensen Precast, any use of Jensen Precast work product without express, written consent is prohibited, and recipient is prohibited from distributing any and all work product to non-approved third parties under penalty of civil action.

| REVISION HISTORY | | | |
|---|---|---|---|
| REV | DESCRIPTION | DATE | BY |
| A | INITIAL RELEASE - 1905-17489-NNV | 11/8/2019 | DCH |

| | | | |
|---|---|---|---|
| DESCRIPTION: | Drop Inlet 24108x48 Rect. Bottom Section Flat Thinwall<br>CASTING LAYOUT | | REV: A |
| PART NUMBER: | 200032210 | DRAWN BY: V. Lund | SHEET: 1 OF 2 |
| CREATED: | 5/29/2019 | MODIFIED: 1/31/2020 | |

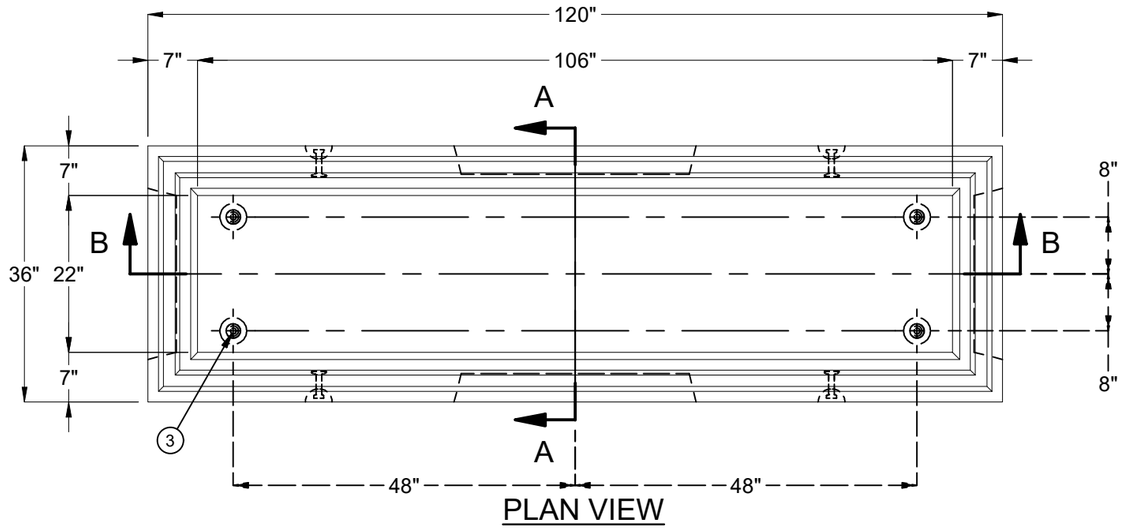


PLAN VIEW

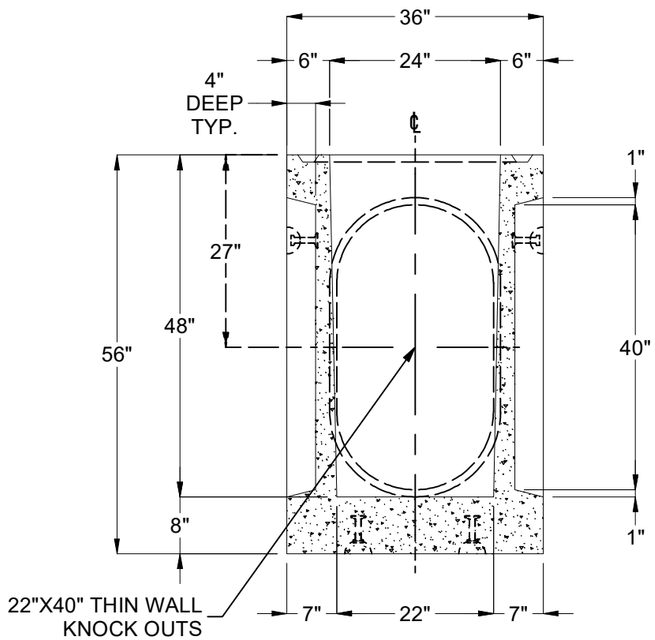


SECTION A-A
(TYPICAL BOTH SIDES)

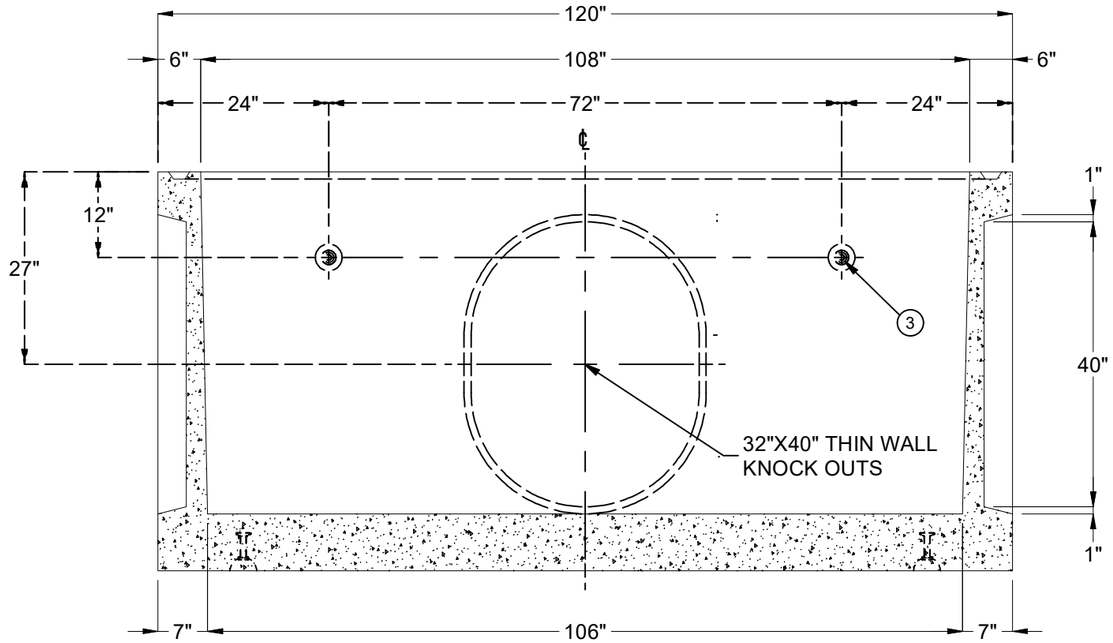


SECTION B-B
(TYPICAL BOTH SIDES)

| | | | |
|---|---|---|---|
| BURY DEPTH: | Maximum 9.0' to Inside Floor | | |
| WATER LEVEL: | 5.0' | WEIGHT: | 9375.44 Lbs |
| DESIGN SPEC: | ASTM C890,ACI 318 | LOADING SPEC: | A-16 (AASHTO HS20-44) |
| REINFORCEMENT TYPE: | Rebar | LIFTING TYPE: | Dogbone |

JENSEN PRECAST EST. 1968

WWW.JENSENPRECAST.COM

©2019 Jensen Precast- All rights reserved.
All materials appearing as Jensen Precast documents and the like are proprietary work product and are protected under U.S. copyright and other laws.
Unless in conjunction with business conducted with Jensen Precast, any use of Jensen Precast work product without express, written consent is prohibited, and recipient is prohibited from distributing any and all work product to non-approved third parties under penalty of civil action.

| | | | |
|---|---|---|---|
| DESCRIPTION: | Drop Inlet 24108x48 Rect. Bottom Section Flat Thinwall<br>CASTING DRAWING | | REV: A |
| PART NUMBER: | 200032210 | DRAWN BY: | V. Lund |
| CREATED: | 5/29/2019 | MODIFIED: | 1/31/2020 |
| | | | SHEET: 2 OF 2 |

200032210.idw