| NOTES |
|---|
| ■ MINIMUM EXCAVATION SIZE: 6'-8" X 5'-2" DEPTH REQ'D. |
| ■ FOR COMPLETE DESIGN AND PRODUCT INFORMATION CONTACT JENSEN PRECAST. |

## BILL OF MATERIALS

| ITEM | QTY | PART NUMBER | DESCRIPTION |
|---|---|---|---|
| 1 | 1 | 200031810 | Tank PJP 500 Gallon 6 Inch Rect. Bottom Section No Baffle |
| 2 | 1 | 200029483 | Tank PJP 350-500 Gallon x 7 Slab Top 24 EE |
| 3 | 2 | 100013648 | SEALANT JOINT BUTYL RUBBER ASTM C-990 AND M198 CS-102 1IN EQUIV X14.5FT PER ROLL |

ASSEMBLY TO BE LIFTED BY CABLE LIFTERS
NOT BY UTILITY ANCHORS

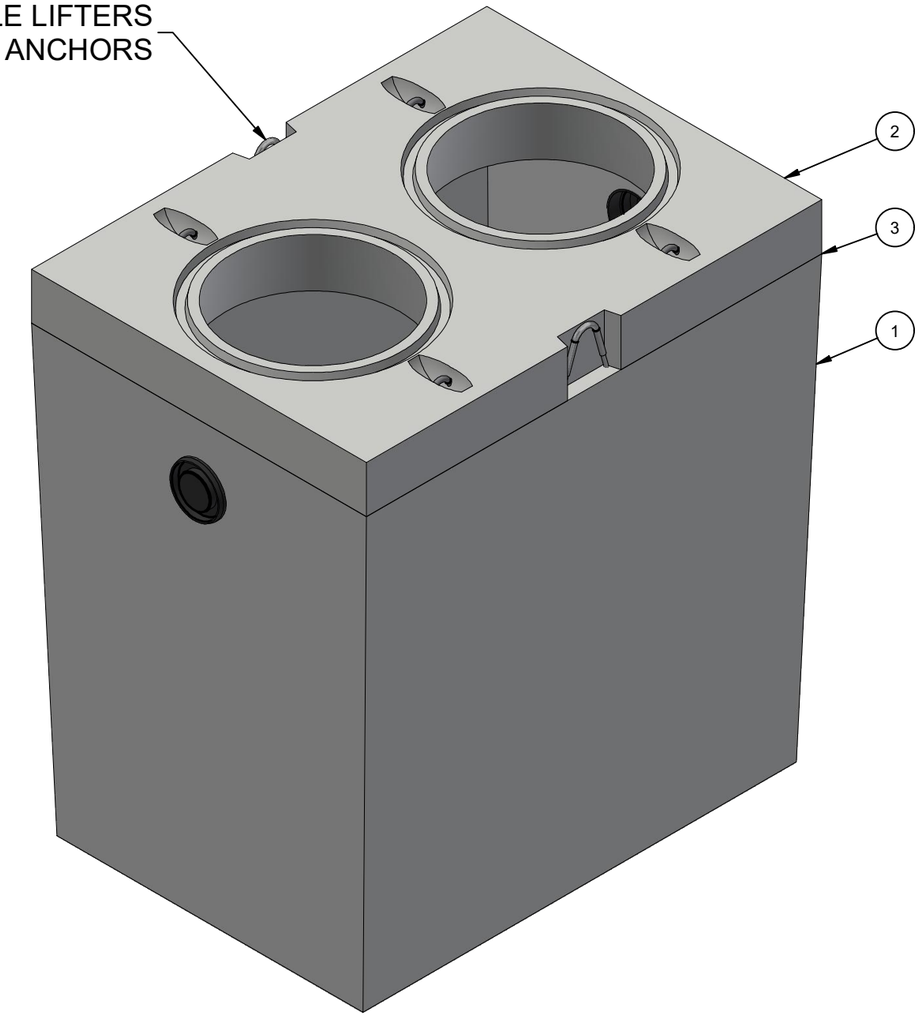


ISO LAYOUT

| LIFTING NOTES |
|---|
| ■ THIS CONCRETE PRODUCT IS DESIGNED TO BE LIFTED AT 2500 PSI WITH 2 LIFT CONNECTIONS EQUALLY LOADED TO 2 LIFTING POINTS AT A MINIMUM 90° SLING ANGLE, MEASURED FROM HORIZONTAL. |

| REVISION HISTORY | | | |
|---|---|---|---|
| REV | DESCRIPTION | DATE | BY |
| A | DRAWING CREATED | 10/28/2019 | T.Larson |
| B | TOP SLAB UPDATED | 12/22/2020 | C.Keller |
| C | PROPERTIES UPDATED | 8/9/2022 | E.FINE |

| | | | |
|---|---|---|---|
| BURY DEPTH: | 1.1' - 6.0' to Top | | |
| WATER LEVEL: | Below Structure | WEIGHT: | 6306.96 Lbs |
| DESIGN SPEC: | ASTM C890,ACI 318 | LOADING SPEC: | A-16 (AASHTO HS20-44) |
| REINFORCEMENT TYPE: | | LIFTING TYPE: | Cable |

JENSEN PRECAST EST. 1968

WWW.JENSENPRECAST.COM

©2018 Jensen Precast- All rights reserved.
All materials appearing as Jensen Precast documents and the like are proprietary work product and are protected under U.S. copyright and other laws.
Unless in conjunction with business conducted with Jensen Precast, any use of Jensen Precast work product without express, written consent is prohibited, and recipient is prohibited from distributing any and all work product to non-approved third parties under penalty of civil action.

| | | | |
|---|---|---|---|
| DESCRIPTION: | Tank PJP 500 Gallon 6 Inch Assembly 24"E, 24"E No Baffle<br>LAYOUT REVIEW | | REV: C-1 |
| PART NUMBER: | 200031873 | DRAWN BY: | E. Fine |
| CREATED: | 1/24/2019 | MODIFIED: | 8/9/2022 |
| | | | SHEET: 1 OF 1 |

200031873.idw