NOTES
■ MINIMUM EXCAVATION SIZE: 6'-8" X 5'-2" DEPTH REQ'D.
■ FOR COMPLETE DESIGN AND PRODUCT INFORMATION CONTACT JENSEN PRECAST.

BILL OF MATERIALS

ITEM	QTY	PART NUMBER	DESCRIPTION
1	1	200031806	Tank PJP 350 Gallon 6 Inch Rect. Bottom Section No Baffle
2	1	200029483	Tank PJP 350-500 Gallon x 7 Slab Top 24 EE
3	2	100013648	SEALANT JOINT BUTYL RUBBER ASTM C-990 AND M198 CS-102 1IN EQUIV X14.5FT PER ROLL

ASSEMBLY TO BE LIFTED BY CABLE LIFTERS
NOT BY UTILITY ANCHORS

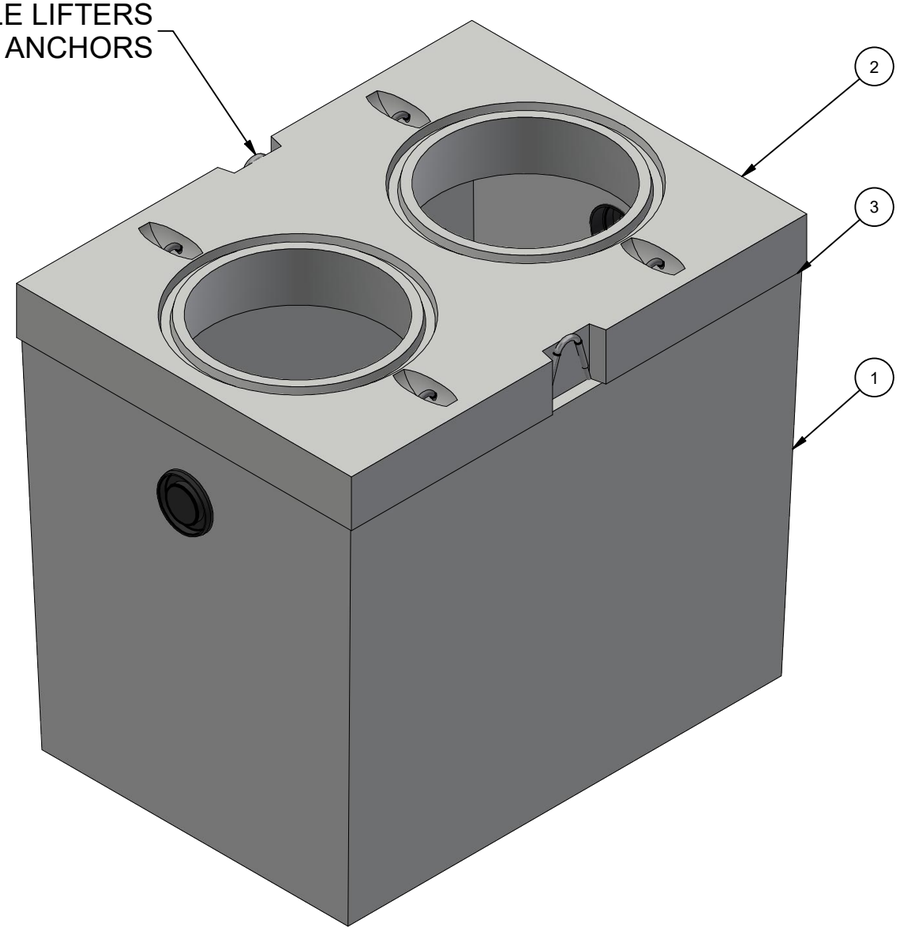

ISO LAYOUT

LIFTING NOTES
■ THIS CONCRETE PRODUCT IS DESIGNED TO BE LIFTED AT 2500 PSI WITH 2 LIFT CONNECTIONS EQUALLY LOADED TO 2 LIFTING POINTS AT A MINIMUM 90° SLING ANGLE, MEASURED FROM HORIZONTAL.

BURY DEPTH:	1.1' - 6.0' to Top		
WATER LEVEL:	Below Structure	WEIGHT:	5552.2 Lbs
DESIGN SPEC:	ASTM C890,ACI 318	LOADING SPEC:	A-16 (AASHTO HS20-44)
REINFORCEMENT TYPE:		LIFTING TYPE:	Cable

JENSEN PRECAST EST. 1968

WWW.JENSENPRECAST.COM

©2018 Jensen Precast- All rights reserved.
All materials appearing as Jensen Precast documents and the like are proprietary work product and are protected under U.S. copyright and other laws.
Unless in conjunction with business conducted with Jensen Precast, any use of Jensen Precast work product without express, written consent is prohibited, and recipient is prohibited from distributing any and all work product to non-approved third parties under penalty of civil action.

REVISION HISTORY			
REV	DESCRIPTION	DATE	BY
A	DRAWING CREATED	10/28/2019	T.Larson
B	TOP SLAB UPDATED	12/22/2020	C.Keller
C	PROPERTIES UPDATED	8/9/2022	E.FINE

DESCRIPTION: Tank PJP 350 Gallon 6 Inch Assembly 24"E, 24"E No Baffle LAYOUT REVIEW				REV: C-1
PART NUMBER:	200031871	DRAWN BY:	E. Fine	SHEET: 1 OF 1
CREATED:	1/24/2019	MODIFIED:	8/9/2022	

200031871.idw