DESIGN NOTES

- FOR COMPLETE DESIGN AND PRODUCT INFORMATION CONTACT JENSEN PRECAST.

BILL OF MATERIALS

ITEM	QTY	PART NUMBER	DESCRIPTION
1	39.626 ft^3	100011425	CONCRETE MIX GENERIC 5000 PSI
2	2	100006264	TANK RISER PAN 24DIA SAFETY-PAN PLASTIC TUFF-TITE 24-RISP
3	4	100004880	ANCHOR UTILITY .671DIA 5.625-SLAB GALV P75 6UA671
4	1	300123092	REINFORCING MAT 300123092

ALTERNATE WWR REINFORCING OPTION	
PART NUMBER	DESCRIPTION
200076947	REINFORCING MAT 200076947

200031005.idw

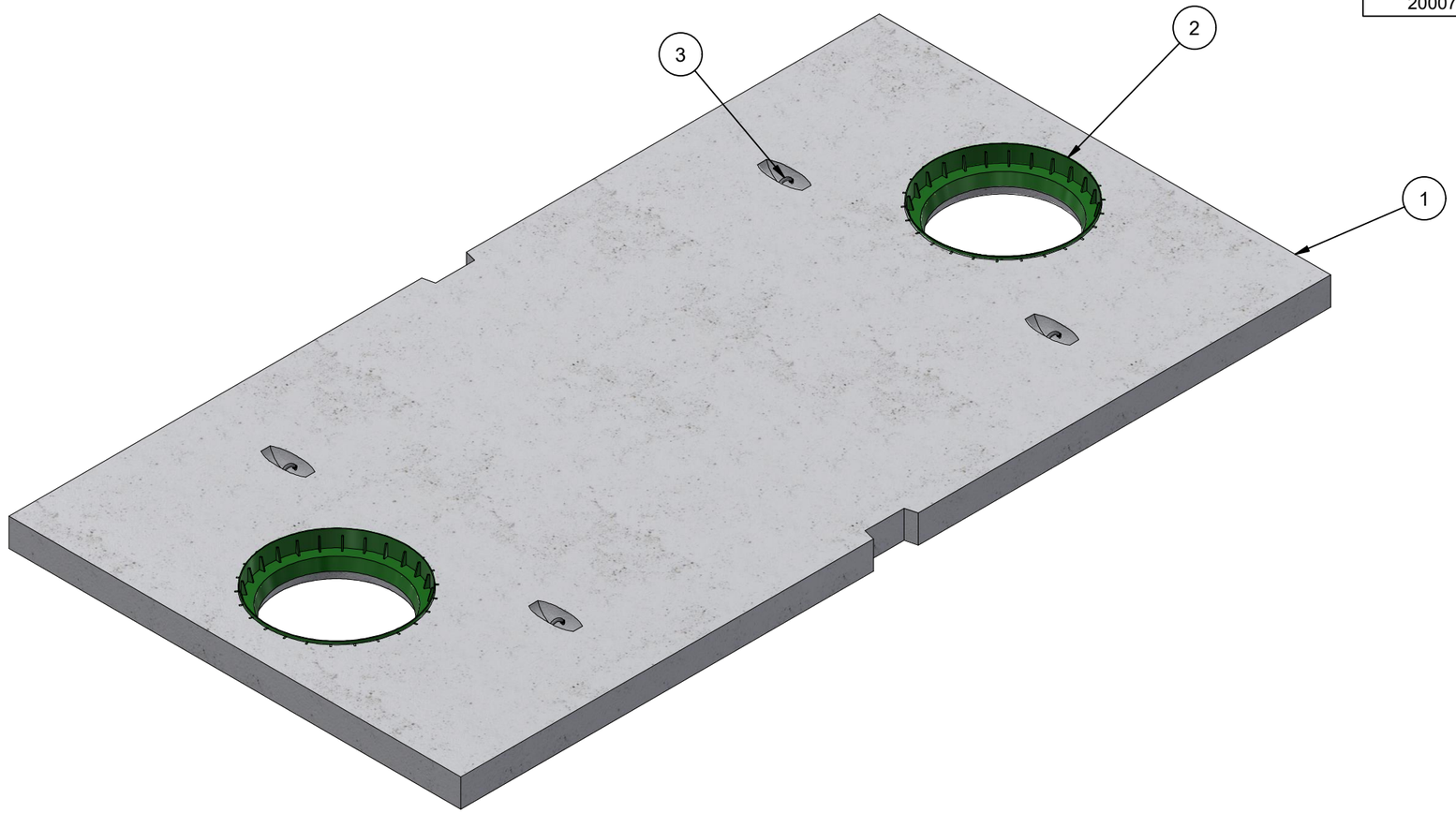

ISO LAYOUT

LIFTING NOTES

- THIS CONCRETE PRODUCT IS DESIGNED TO BE LIFTED AT 2500 PSI WITH 4 LIFT CONNECTIONS EQUALLY LOADED TO 2 LIFTING POINTS AT A MINIMUM 60° SLING ANGLE, MEASURED FROM HORIZONTAL.

BURY DEPTH:	0.0' - 3.0' to Top of Top Slab		
WATER LEVEL:	Below Structure	WEIGHT:	5963.05 Lbs
DESIGN SPEC:	ASTM C890,ACI 318	LOADING SPEC:	A-02 (200 psf)
REINFORCEMENT TYPE:	Rebar	LIFTING TYPE:	A-Anchor

JENSEN PRECAST EST. 1968

WWW.JENSENPRECAST.COM

©2018 Jensen Precast- All rights reserved.
All materials appearing as Jensen Precast documents and the like are proprietary work product and are protected under U.S. copyright and other laws.
Unless in conjunction with business conducted with Jensen Precast, any use of Jensen Precast work product without express, written consent is prohibited, and recipient is prohibited from distributing any and all work product to non-approved third parties under penalty of civil action.

REVISION HISTORY

REV	DESCRIPTION	DATE	BY
A	DRAWING CREATED	10/24/2019	T.Larson

DESCRIPTION:	Tank PJS 2500 Gallon x 5 Slab Top 24 EE CASTING LAYOUT		REV: A-1
PART NUMBER:	200031005	DRAWN BY:	M.Vallarino
CREATED:	2/22/2018	MODIFIED:	6/22/2023
			SHEET: 1 OF 2

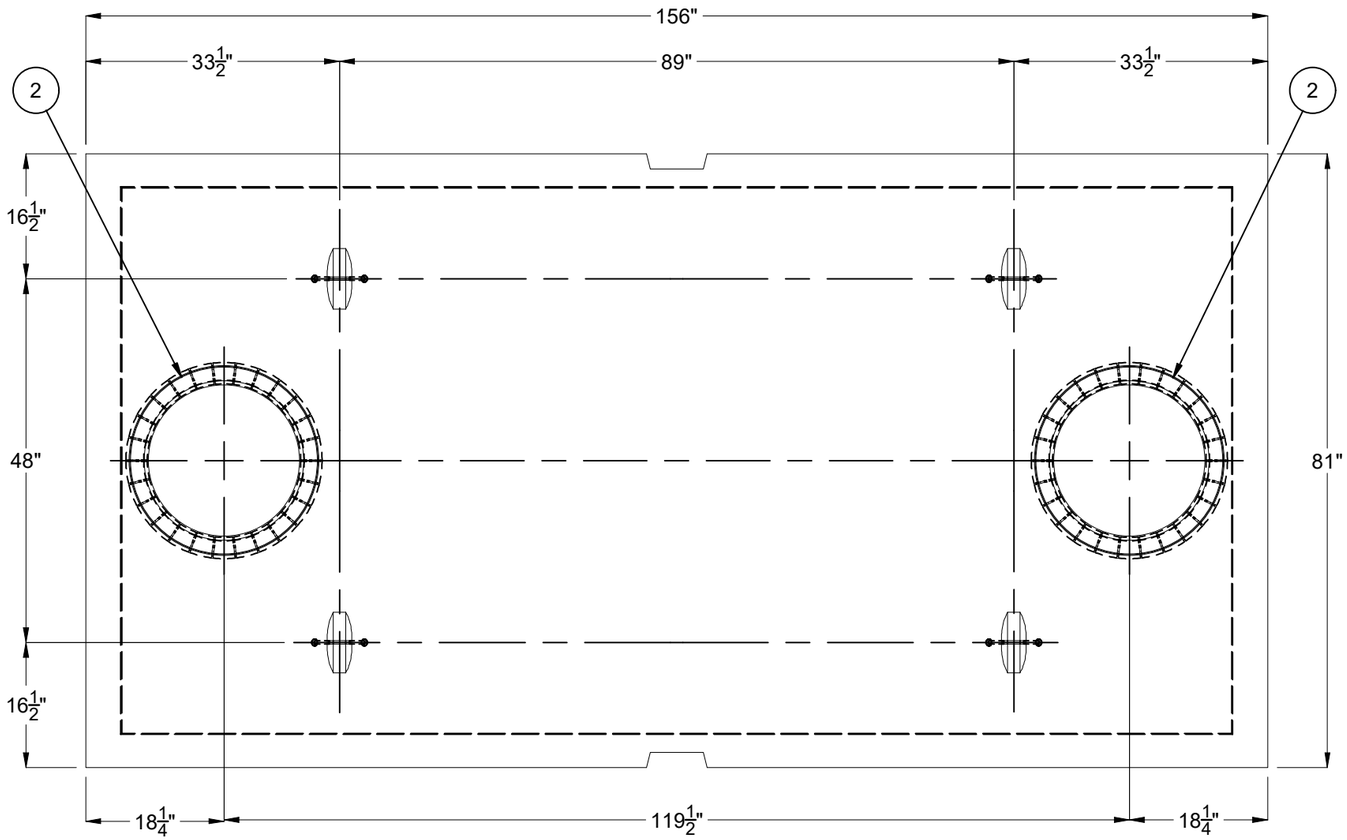

PLAN VIEW

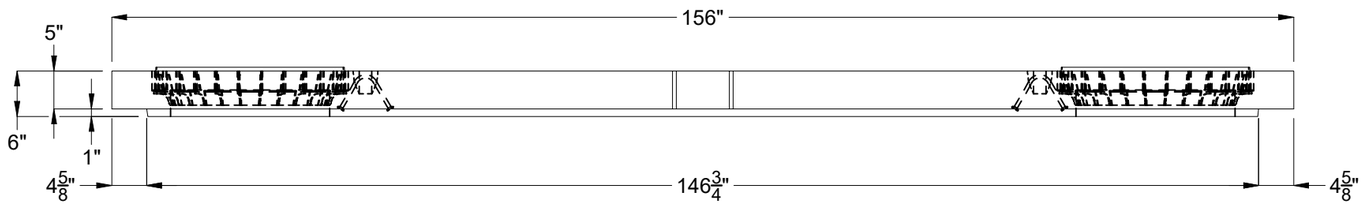

ELEVATION VIEW

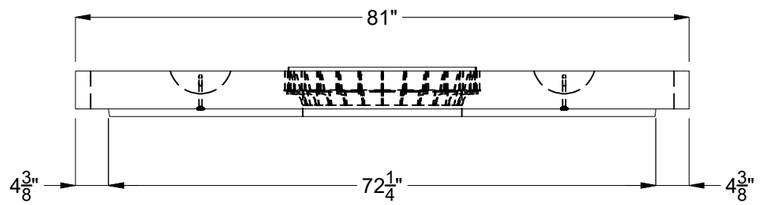

ELEVATION VIEW

200031005.idw

BURY DEPTH:	0.0' - 3.0' to Top of Top Slab		
WATER LEVEL:	Below Structure	WEIGHT:	5963.05 Lbs
DESIGN SPEC:	ASTM C890,ACI 318	LOADING SPEC:	A-02 (200 psf)
REINFORCEMENT TYPE:	Rebar	LIFTING TYPE:	A-Anchor

JENSEN PRECAST EST. 1968

WWW.JENSENPRECAST.COM

©2018 Jensen Precast- All rights reserved.
All materials appearing as Jensen Precast documents and the like are proprietary work product and are protected under U.S. copyright and other laws.
Unless in conjunction with business conducted with Jensen Precast, any use of Jensen Precast work product without express, written consent is prohibited, and recipient is prohibited from distributing any and all work product to non-approved third parties under penalty of civil action.

DESCRIPTION:	Tank PJS 2500 Gallon x 5 Slab Top 24 EE CASTING DRAWING		REV: A-1
PART NUMBER:	200031005	DRAWN BY:	M.Vallarino
CREATED:	2/22/2018	MODIFIED:	6/22/2023
			SHEET: 2 OF 2