NOTES
■ IN COMPLIANCE WITH STRUCTURAL LOADING REQUIREMENTS OF ASTM INTERNATIONAL
■ MUST BE INSTALLED PER "JENSEN PRECAST UNDERGROUND WASTEWATER PRECAST CONCRETE TANK INSTALLATION PROCEDURE" WHICH CAN BE FOUND AT https://www.jensenprecast.com/Tank-Installation-Procedure-d2106.pdf. THIS PROCEDURE ADDRESSES REQUIRED EXCAVATION, SITE PREPARATION, INSTALLATION, VENTILATION, AND WATER/VACCUM TESTING

BILL OF MATERIALS

ITEM	QTY	PART NUMBER	DESCRIPTION	WEIGHT (LBS)
1	1	200026194	Tank JS 2000 Gallon 4 Inch Assembly 24"E, 24"E Tuf-Tite No Baffle	20544
2	JOB SPECIFIC	100002742	LID PLASTIC WEST POLYLOK 3008-W 24DIA	7
3	JOB SPECIFIC	100002739	RISER 3008 PLASTIC 24 DIA X 6IN	5
4	JOB SPECIFIC	100002740	RISER 3008 PLASTIC 24 DIA X 12IN	9
5	JOB SPECIFIC	100012046	Plug Cover D2428x6 Slab Top	300

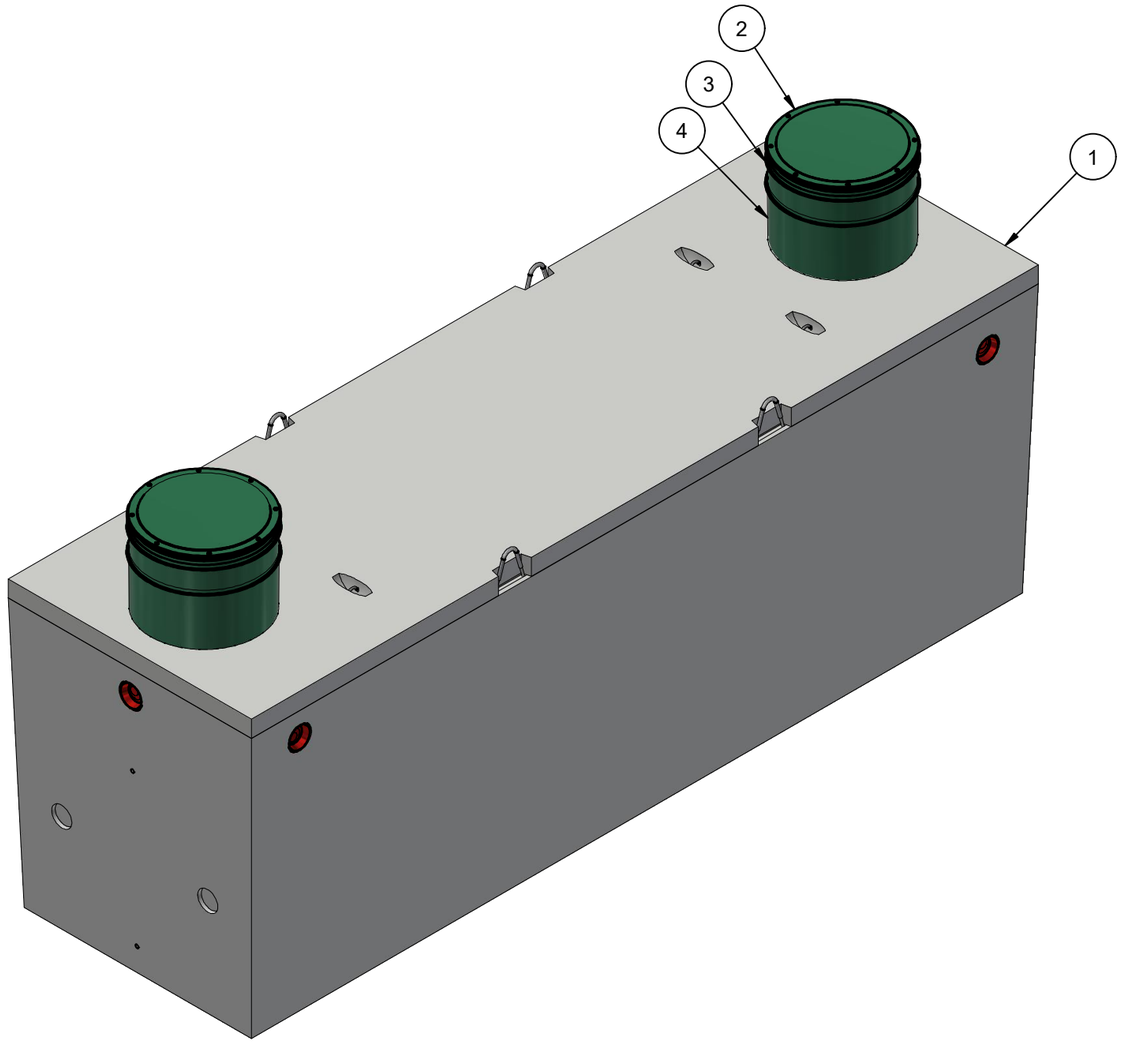

ISO LAYOUT

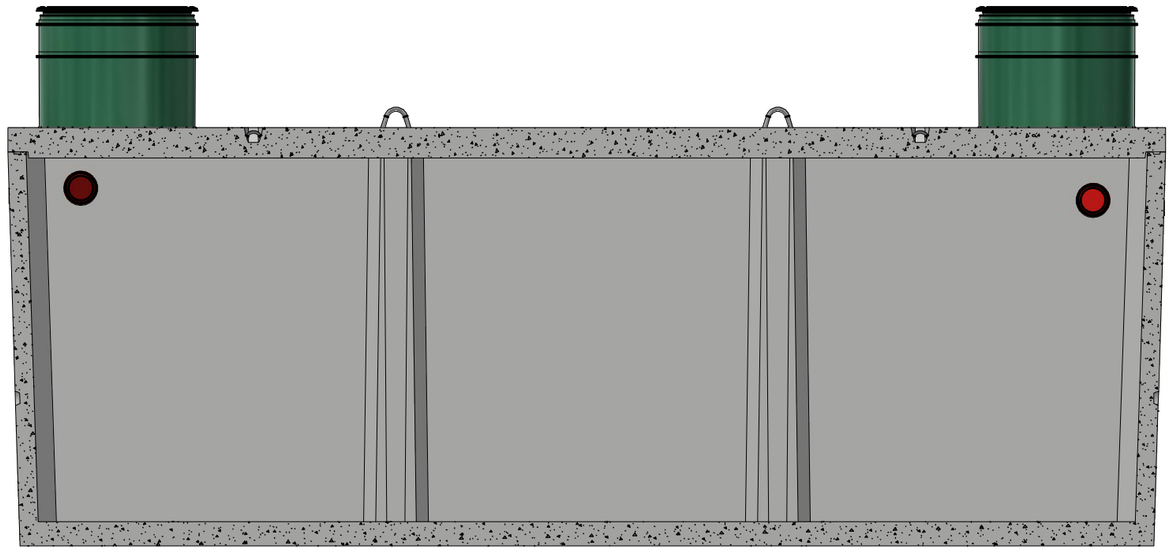

SECTION

REVISION HISTORY			
REV	DESCRIPTION	DATE	BY
B-4	DRAWING CREATED	10/16/2019	T.Larson
B	PROPERTIES UPDATED	7/13/2022	E.FINE

BURY DEPTH:	0.0' - 3.0' to Top		
WATER LEVEL:	Below Structure	WEIGHT:	20885.88 Lbs
DESIGN SPEC:	ASTM C890,ACI 318	LOADING SPEC:	A-02 (200 psf)
REINFORCEMENT TYPE:		LIFTING TYPE:	

JENSEN PRECAST EST. 1968

WWW.JENSENPRECAST.COM

©2018 Jensen Precast- All rights reserved.
All materials appearing as Jensen Precast documents and the like are proprietary work product and are protected under U.S. copyright and other laws.
Unless in conjunction with business conducted with Jensen Precast, any use of Jensen Precast work product without express, written consent is prohibited, and recipient is prohibited from distributing any and all work product to non-approved third parties under penalty of civil action.

DESCRIPTION:	Tank JS 2000 Gallon 4 Inch Layout Holding Tank 24"E, 24"E Tuf-Tite No Baffle LAYOUT REVIEW		REV: B-4
PART NUMBER:	200030908	DRAWN BY:	E. Fine
CREATED:	1/31/2019	MODIFIED:	7/13/2022
			SHEET: 1 OF 2

200030908.idw

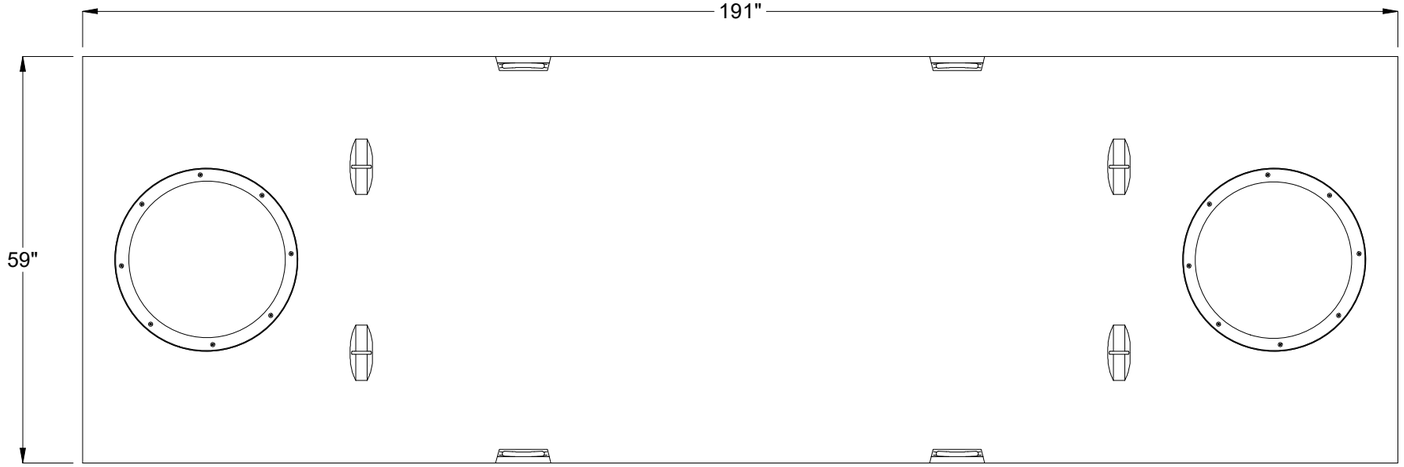

PLAN VIEW

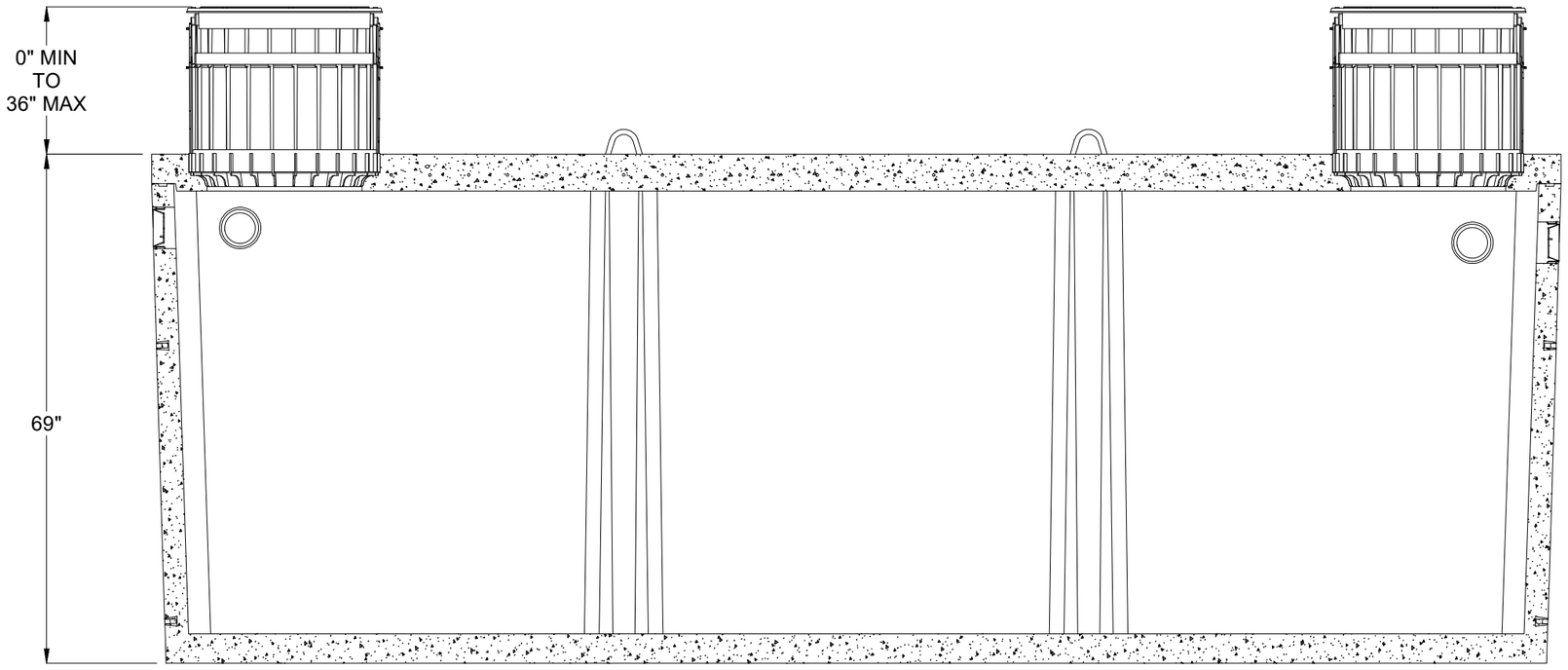

CROSS SECTION

BURY DEPTH:	0.0' - 3.0' to Top		
WATER LEVEL:	Below Structure	WEIGHT:	20885.88 Lbs
DESIGN SPEC:	ASTM C890,ACI 318	LOADING SPEC:	A-02 (200 psf)
REINFORCEMENT TYPE:		LIFTING TYPE:	

JENSEN PRECAST EST. 1968

WWW.JENSENPRECAST.COM

©2018 Jensen Precast- All rights reserved.
All materials appearing as Jensen Precast documents and the like are proprietary work product and are protected under U.S. copyright and other laws.
Unless in conjunction with business conducted with Jensen Precast, any use of Jensen Precast work product without express, written consent is prohibited, and recipient is prohibited from distributing any and all work product to non-approved third parties under penalty of civil action.

DESCRIPTION:	Tank JS 2000 Gallon 4 Inch Layout Holding Tank 24"E, 24"E Tuf-Tite No Baffle LAYOUT DRAWING		REV: B-4
PART NUMBER:	200030908	DRAWN BY:	E. Fine
CREATED:	1/31/2019	MODIFIED:	7/13/2022
			SHEET: 2 OF 2

200030908.idw